CLEANING AND MAINTENANCE

The Equipment Manager has the duty to check and comply with the cadences of the maintenance in the table below by calling the Technical Assistance service when indicated authorized.

OPERATION	FREQUENCY				ORDINARY	EXTRAORDINARY	AUTHORIZED PERSONNEL
	Depending on use and necessity	Monthly	Semestral	Annual			
CLEANING OF EXTERNAL SURFACES	X				X		USER 
CLEANING OF ACCESSIBLE INTERNAL PARTS (WITHOUT THE USE OF TOOLS)	X				X		
POWER CABLE CHECK, PLUGS AND/OR SOCKETS			X		X		
INTEGRITY CHECK OF SEALS		X			X		
CLEANING THE DEFROST WATER COLLECTION TANK	X				X		TECHNICAL ASSISTANCE 
CONDENSER CLEANING	X				X		
INTEGRITY CHECK OF COOLING SYSTEM PIPES			X		X		
INSPECTION OF CABLES AND INTERNAL POWER CONNECTIONS			X		X		
REPLACEMENT OF LAMPS / LEDS (IF PRESENT)						X	
CONTROL PANEL REPLACEMENT (ELECTRONIC CONTROL UNIT - THERMOSTAT - ETC.)						X	
REPLACEMENT OF THE POWER CABLE, PLUGS AND / OR ELECTRICAL SOCKETS						X	

WARNING

After each maintenance, the electrical safety tests must be carried out in accordance with standard CEI EN 50106.

MAINTENANCE PROCEDURES

Ordinary maintenance and periodic checks



This type of maintenance is the responsibility of the user.

If any malfunctioning of the equipment is detected, make sure that it is not due to insufficient ordinary maintenance, otherwise request the intervention of qualified personnel.

- Regular and precise cleaning of the equipment helps to prevent always improper shutdowns, deterioration of the equipment, alteration of the quality of the products, and therefore a loss of profit.

- Proceed with ordinary maintenance of the equipment with the frequency suggested in the following table.

Before carrying out any maintenance and cleaning operation reserved for the user, completely disconnect the display cabinet from the power supply by means of the main switch located upstream of the appliance (fig.8), or by removing the power supply socket (fig.7) .

Summary table for ordinary maintenance



OPERATION	DESCRIPTION	FREQUENCY
CLEANING OF STAINLESS STEEL SURFACES	Wash only with lukewarm water and neutral soaps, rinse well and dry carefully with a soft cloth. Never use abrasive products.	**Weekly**
CLEANING OF PLASTIC SURFACES	Wash only with lukewarm water and neutral soaps, rinse well and dry carefully with a soft cloth. Never use alcohol, acetone or solvents that could aesthetically and structurally damage the material	**Weekly**
CLEANING OF GLASS SURFACES	Only use specific glass-cleaning products. Do not use water only due to the possibility of limescale being deposited on the glazed surface.	**Daily**
CLEANING OF WOODEN SURFACES	Use only a damp cloth	**Weekly**
ADDITIONAL DEFROST	In particular conditions of high temperature and humidity the high formation of frost on the evaporator is possible with consequent deterioration of the performance of the equipment. If these conditions persist over time, qualified personnel must intervene to change the parameters of the electronic control unit; while awaiting the intervention it is only possible to command one or more additional defrosts during the day (in this case the consistency of the product may be affected).	**Awaiting intervention by qualified personnel** 
PERIODIC DEFROST	In order to obtain maximum performance from the refrigeration system, prolonged defrosting of the equipment is highly recommended. Before removing the displayed product, always perform an additional defrost in order to eliminate the maximum quantity of frost or ice from the evaporator; unplug the main switch for a minimum of 5 hours. Check for the complete absence of ice residues in the refrigerated compartment, dry well and start again.	**Maximum every 15 days**

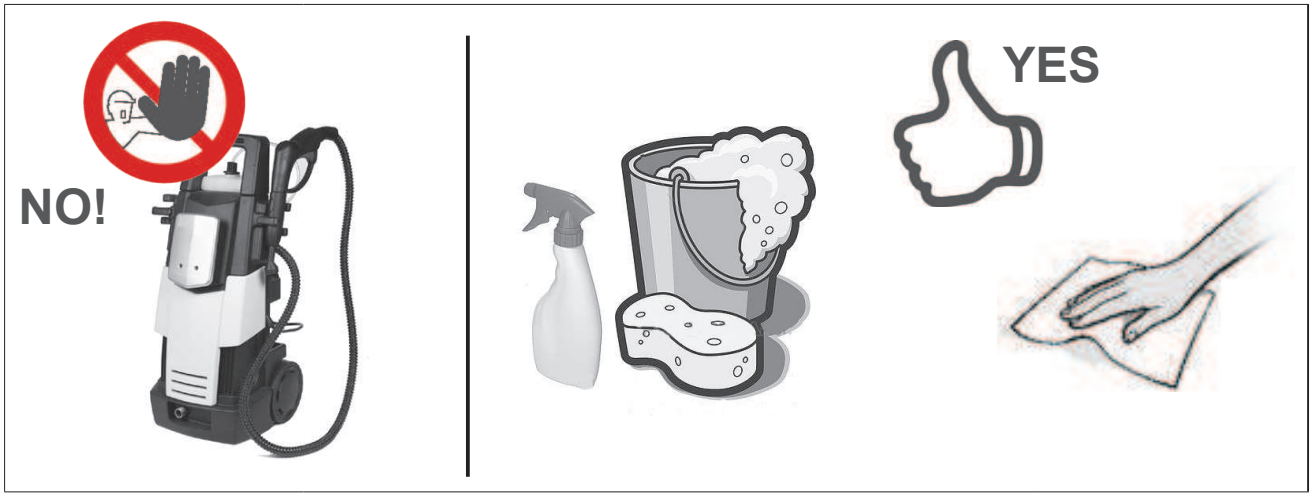

Never use water jets to clean the appliance.
Use only lukewarm water and non-aggressive detergents. Dry with a soft cloth.
Never use water jets to clean the appliance.
Use only lukewarm water and non-aggressive detergents. Dry with a soft cloth.

Extraordinary maintenance

This type of maintenance must only be carried out by qualified personnel.
Extraordinary maintenance refers to all the operations not shown in the previous table.

Before carrying out any maintenance and cleaning operation reserved for the user, completely disconnect the display cabinet from the power supply by means of the main switch located upstream of the appliance (fig.8), or by removing the power supply socket (fig.7).

Cleaning the air condenser

This operation must be carried out by qualified personnel.

- Exclusively when the fan is stationary, clean the condenser fins with the use of a rigid bristle brush, with the aid of an aspirator and, even better, with a jet of compressed air.

Do not use metal brushes and protect hands with work gloves (fig.26).

Operation frequency:
The condenser must be ***deep-cleaned at most once a month.***

- Attention: Do not use rigid or metallic objects to clean the condenser as these may damage it.
- It is advisable to use work gloves to protect hands during cleaning operations.
- After cleaning, reassemble the removable elements (naturally dry) and restore the power supply. Once the internal operating temperature has been reached, the display cabinet can be reloaded with the product.

PROBLEMS – CAUSES - SOLUTIONS



PROBLEMS	CAUSES	SOLUTIONS
The equipment does not work.	Automatic switch tripped.	Find the cause of the circuit-breaker intervention in advance; only then reactivate it.
	Main switch open.	Close the main switch.
	Control unit switched off.	Press the ON button.
	Voltage outage of the premises.	If the voltage outage persists for a lengthy period, transfer the product to a suitable chiller, in order to limit heating as far as possible.
	Fuses burned	Replace the burnt fuses (see wiring diagram).
	Faulty control unit	Replacement of the control unit by a specialist technician
The temperature of the display compartment is not sufficiently low.	Evaporator(s) completely blocked by ice.	Perform a complete defrost after transferring all the products to a suitable chiller. Only reintroduce the product into the display cabinet after having identified the cause of the problem.
	Internal fans stopped or with damaged fans.	Replace any non-functioning fans. Identify the electrical problem if the fans are intact. Replace damaged fans with new ones.
	Incorrect temperature setting on the electronic control unit.	Set the appropriate temperature.
	Electronic control unit not efficient.	Replace the electronic control unit or the temperature probes.
	Display space struck by air currents or exposed to direct or reflected insolation.	Eliminate excessive drafts and avoid direct or reflected light from the sun.
	Air condenser blocked by dust or dirt in general.	Carefully clean the condenser.
	Insufficient air coolant flow rate of the condenser.	Remove anything that is an obstacle to sufficient air circulation through the condenser (sheets of paper, cardboard, insufficiently slotted grids, etc.).
	Insufficiency of refrigerant in the refrigeration system.	Find the cause of the refrigerant leak in advance and eliminate it; top up the refrigerant load, possibly preceded by repeated emptying of the system.
	Insufficient water cooling capacity of the water condenser.	Check if the water supply is present; if it is present, adjust or replace the regulating valve or pressure switch
	Temperature probe out of calibration.	Check operation of the probe. If necessary replace it.
	Temperature probe with air blocked.	Move the products obstructing the correct passage of air on the probe.
	Temperature probe with bottles too close.	Move the bottles to a distance that allows the probe to correctly detect temperature.
	Air recirculation grids obstruction.	Remove the products above the internal grids to let the ventilation air circulate properly.

PROBLEMS	CAUSES	SOLUTIONS
The product placed on the air outlet is too hard, the one on the suction is too soft	Evaporator blocked by snow	Check that the display compartment is not affected by drafts, that the curtain/sliding elements are always closed aside from during the maximum sales periods, that ventilation of the refrigerated compartment is sufficiently active and that the envisaged load limits have not been exceeded.
	Evaporator blocked by ice.	The information stated above is fully valid and check, in addition, the effectiveness of the defrost (start command, efficiency of the refrigeration system, control of end defrost).
	Internal fans not efficient	Restore fan efficiency by replacing any non-functional fans.
The product placed on the air outlet is too hard, the one on the suction is too soft.	Supply voltage too low.	Check that there is a nominal voltage of 220 at the compressor terminals; in any case a value of between 198 and 242 V is permitted. Voltage lower than 198 V can cause problems with starting of the compressor. Check the efficiency of the electrical system as far as the compressor terminals.
	Temperature set on the thermostat too high.	If the set temperature is higher than the air in the display compartment, the compressor does not work. Set the most appropriate temperature if the current temperature is not low enough.
The compressor works for too long or constantly.	Temperature of the sales area too high.	If the appliance works correctly and the room temperature cannot be reduced (with a ventilation or air conditioning system), the compressor may also work constantly; in this case the refrigeration system has reached the maximum performance limit.
	Compressor room temperature too high (remote condensing units).	Investigate the cause of the temperature rise in the compressor room and proceed accordingly. If, as mentioned above, it is not possible to reduce the room temperature, the compressor may also work constantly.
	Clogged air condenser.	Thoroughly clean the condenser.
	Condenser cooling air flow with insufficient water.	Check the opening of the valves, the efficiency of the regulating valve (if necessary, replace it).
	Insufficient refrigerant in the circuit.	Identify the cause of the loss of refrigerant and, only later, proceed with load top up.
	Very poor internal ventilation.	Restore correct ventilation by removing any obstacles, replacing the fans if necessary.
	Extremely clogged evaporators.	Completely defrost the evaporators and then investigate the possible cause of obstruction and operate accordingly
	Thermostat set to a temperature that is too low.	Set the thermostat to the correct temperature
Absence of temperature indication on the digital thermometer.	Flat power battery.	Insert a battery identical to the one present.
	Inefficient probe or interrupted cable.	Replace the entire digital thermometer.
	Inefficient electronics.	Replace the entire digital thermometer.
Absence of defrost water.	Clogged water drain hose.	Restore the outflow of condensation water by adjusting the pipe and freeing it from any obstructions
	Defrost absent or inefficient	Intervene on the control and command defrost elements (control unit, probes, solenoid valve, etc.) and/or on the position of the defrost end probe.

PROBLEMS	CAUSES	SOLUTIONS
Absence of lighting.	Light switch not closed.	Close the light switch or press the light button on the electronic control unit.
	LED light not correctly inserted.	Insert the light correctly into the appropriate connections.
	LED light fault.	Replace the light with a new one of the same color temperature.
	Inefficient power supplies.	Replace faulty power supplies.
Excessive noise.	Vibration of the sheet metal inside the window.	Tighten all fixing screws well.
	Internal fans not well secured.	Tighten all fixing screws well.
	Internal fan blades in contact with parts of the same.	Replace the fans with others that are perfectly adjusted. If the noise is caused by sliding of the blades on ice formations on the fan ring, intervene on the air circulation and/or on the defrost.
	Pipes in contact with other parts of the equipment.	Prevent the pipes from touching through vibration other parts of the system; continuous rubbing can also cause pipe breaks and refrigerant loss.
	No levelling of the equipment.	Perfectly level the equipment.
	Compressor broken	Replace the compressor
	No gas in the circuit.	Check the refrigeration circuit gas pressure and reset it if necessary.
The glass panels condense and prevent visibility.	The air inside the display cabinet is too humid.	Ventilate the display cabinet in order to generate an air exchange. Wipe off the condensation on the glass panels using absorbent paper or cloths.
The glass condenses on the outside and prevents visibility.	The room is too humid.	Turn on the dehumidification system or circulate the air to bring the humidity below 55% RH.
	The heated glass panels (if any) do not work.	Check with a technician the power supply of the glass panels and their operation.
	Products not positioned correctly in the refrigerated compartment.	Place the product within the envisaged load limits.
	Internal temperature not correct.	Verify that the refrigeration system is efficient. Check the set temperature.
Water losses are found.	Condensate drain pipe broken.	Replace the piping.
	Condensation water leaks at the pipe connection point.	Check the fixing of the pipe. Firmly close the clamping hole of the condensate drain pipe on the display cabinet coupling.
The Magnetothermic switch is triggered and does not remain "up"	Probable short circuit on the display cabinet system.	Check the electrical system and reset the fault.
The Magnetothermic switch is triggered and does not remain "up"	Excessive absorption in the domestic network.	Switch off the utilities to remain within the maximum available current consumption.

CONDENSER CLEANING



BEFORE PERFORMING THIS OPERATION, DISCONNECT THE EQUIPMENT FROM THE ELECTRICITY NETWORK.



THIS OPERATION MUST BE CARRIED OUT BY QUALIFIED PERSONNEL AND WITH APPROPRIATE PROTECTIONS AND APPROPRIATE TOOLS.

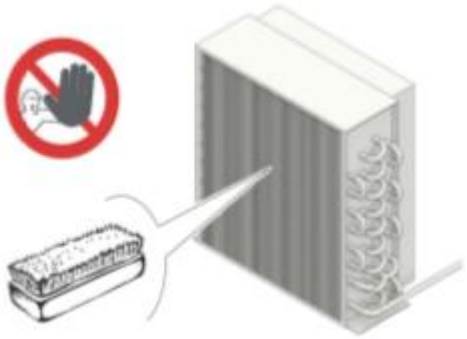

THE CLEANING OF THE CONDENSER MUST BE MADE ON A MONTHLY BASIS.

WARNING

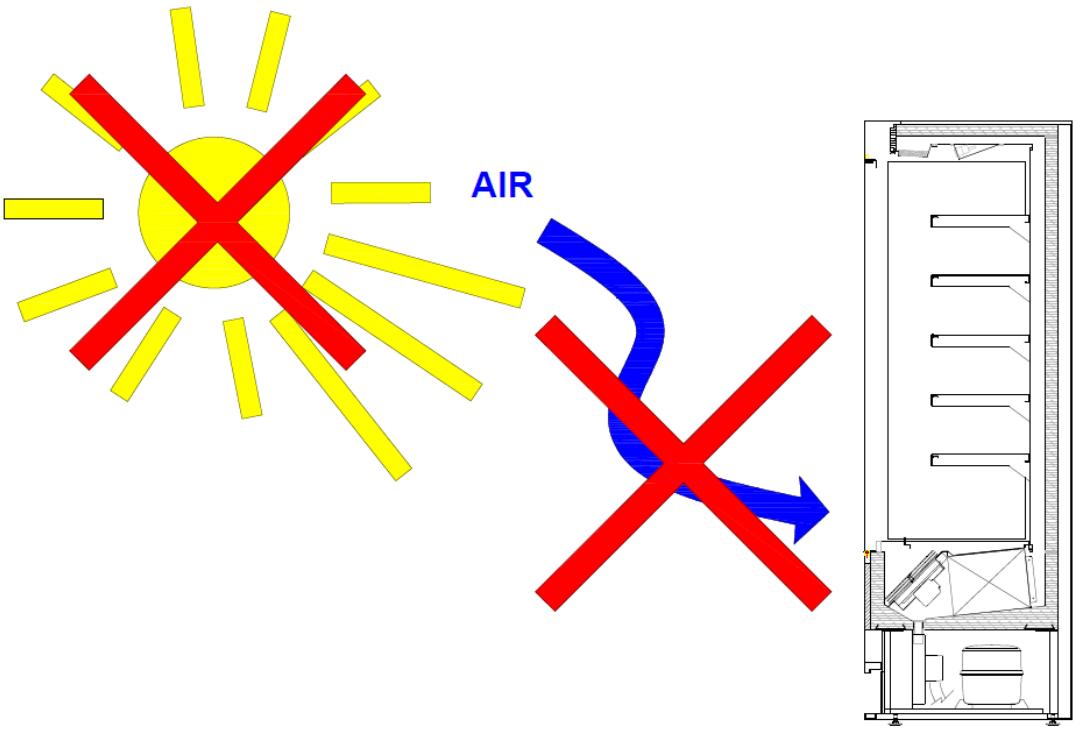

NO ESPOSIZIONE A RAGGI SOLARI DIRETTI
NO EXPOSURE TO DIRECT SUNLIGHT

NO FLUSSI DI ARIA ESTERNA
NO EXTERNAL AIR FLOWS

LOAD LIMITS

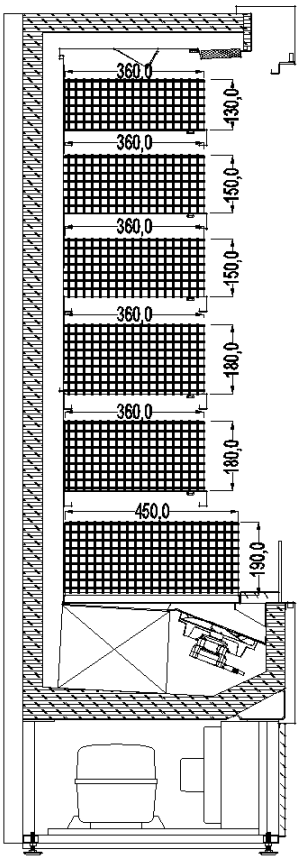

TALL BOY

NET LOAD
LIMITS

100CM VERSION: GROSS REFRIGERATED VOLUME	650 liters
120CM VERSION: GROSS REFRIGERATED VOLUME	800 liters

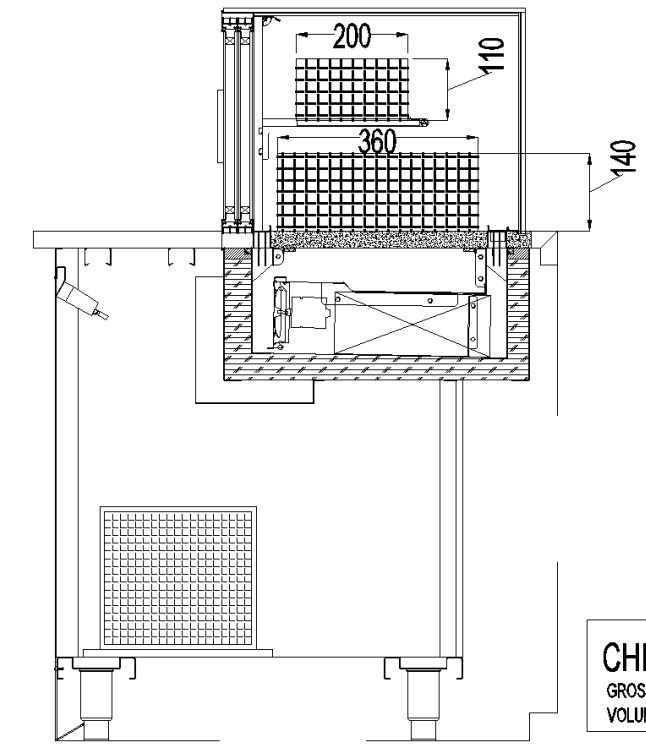

CHILLED

NET LOAD
LIMITS

CHILLED120l GROSS REFRIGERATED VOLUME	200 liters

LOW GRAB&GO

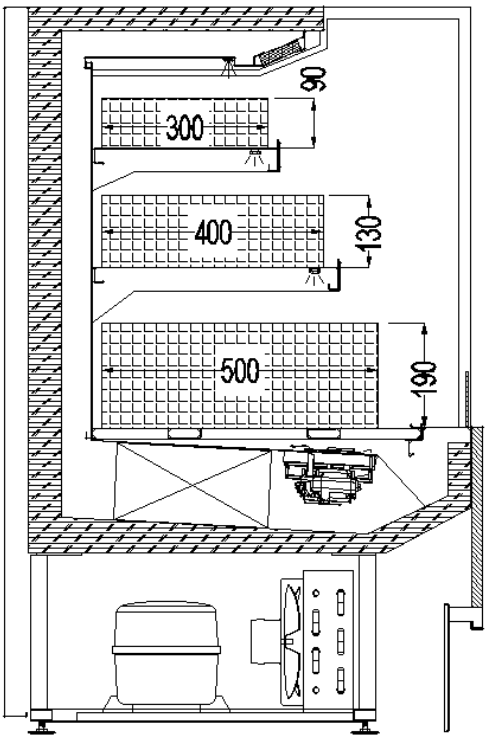

NET LOAD
LIMITS

G&Go120 VERSION: GROSS REFRIGERATED VOLUME	400 liters
G&GoD120 VERSION: GROSS REFRIGERATED VOLUME	400 liters

COMBI

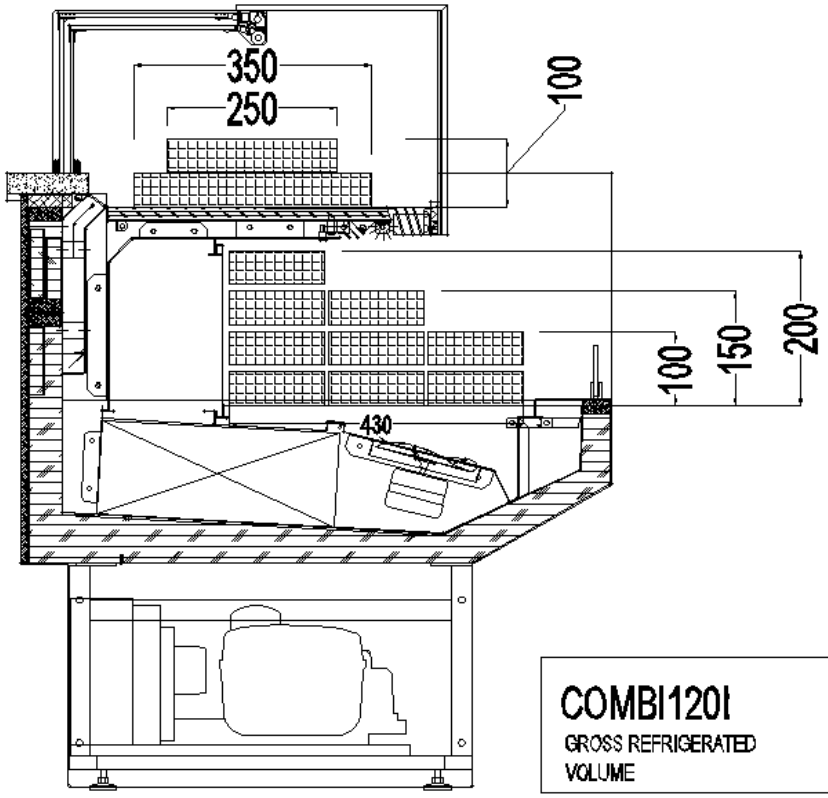

NET LOAD LIMITS

COMBI120I GROSS REFRIGERATED VOLUME	170 liters

FOR MAINTENANCE

1

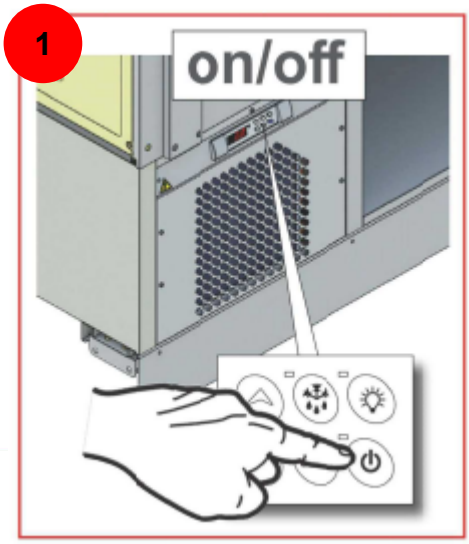

2

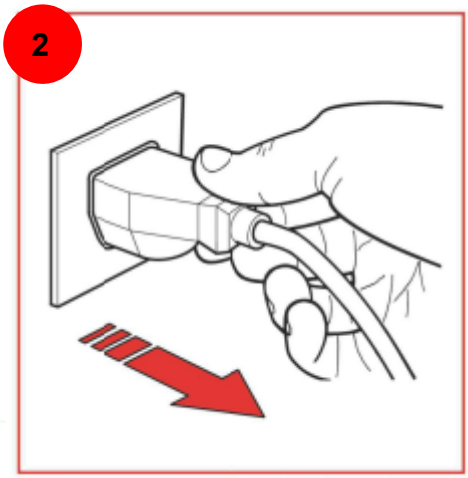

3

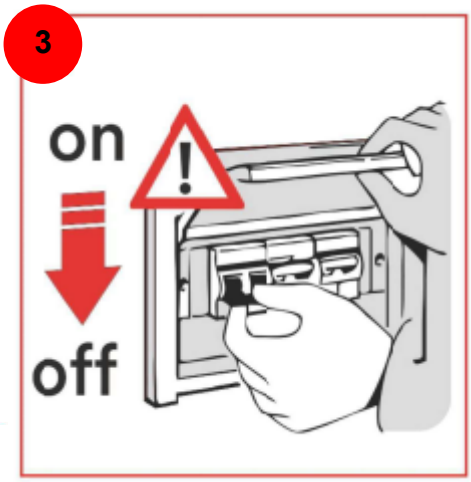

4



5

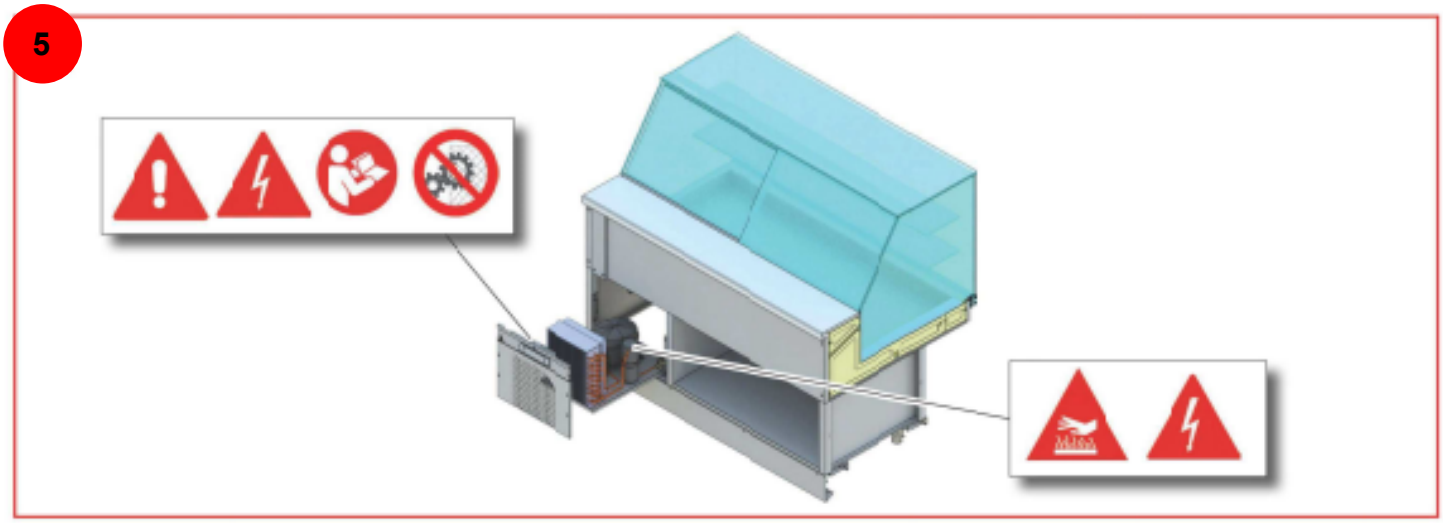

ATTENTION BEFORE ANY MAINTENANCE WORK DISCONNECT THE EQUIPMENT FROM THE ELECTRICITY NETWORK

6

SHOWCASE INSTALLATION

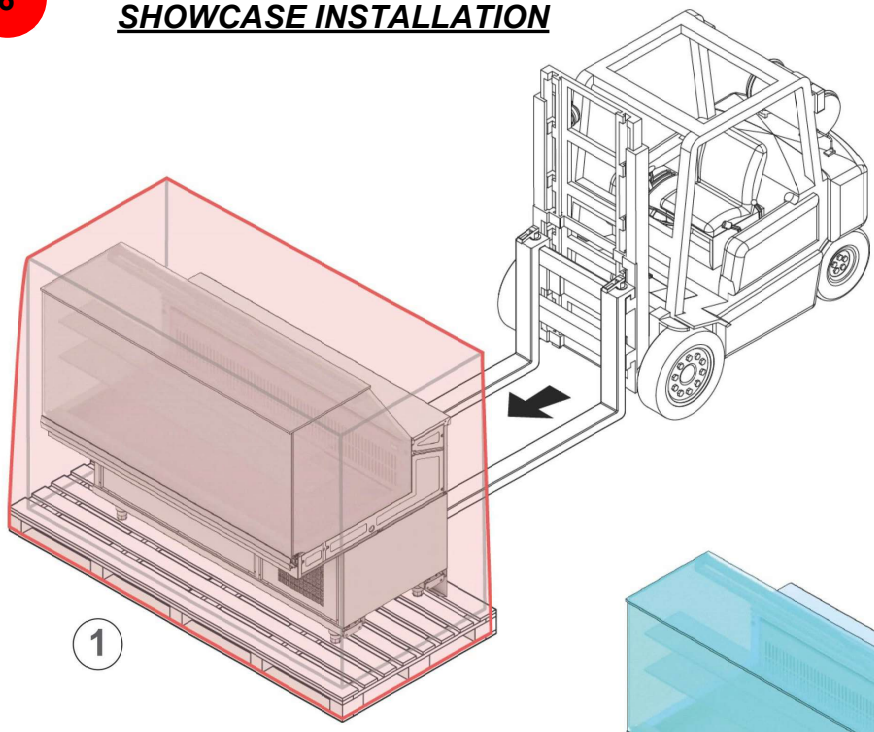

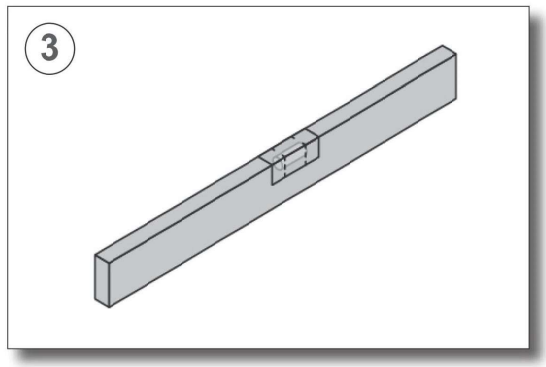

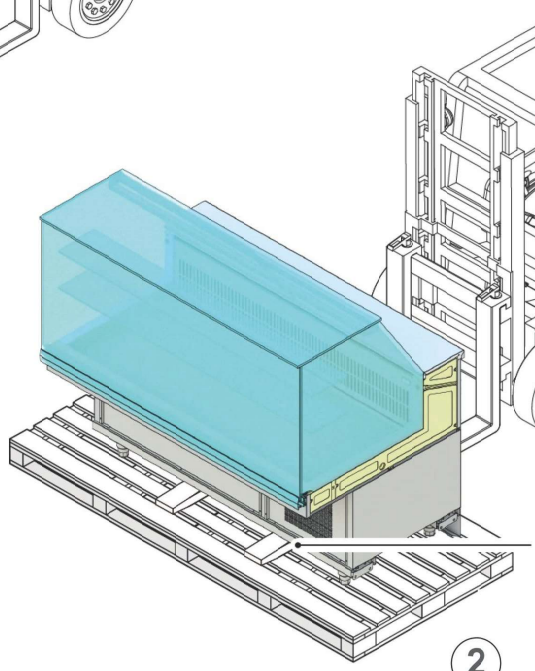

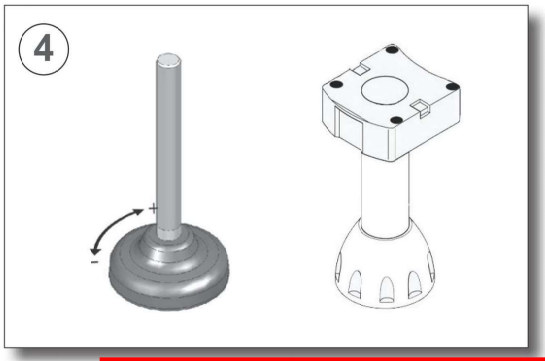

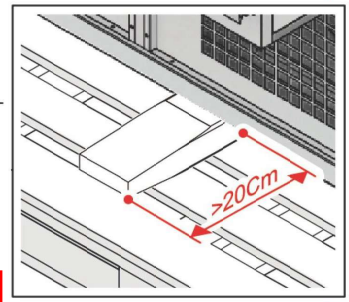

CORRECTLY POSITIONING AND UNPACKING THE SHOWCASE

7

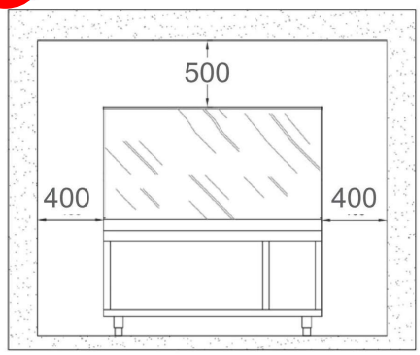

8

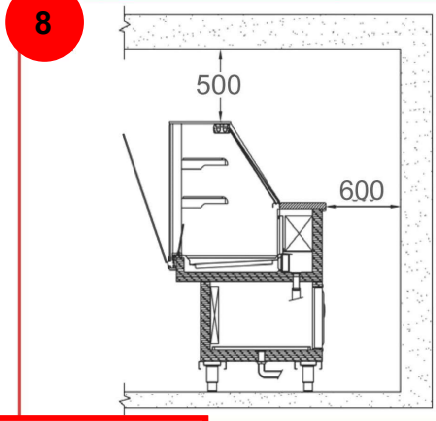

DISTANCE FROM WALLS

9

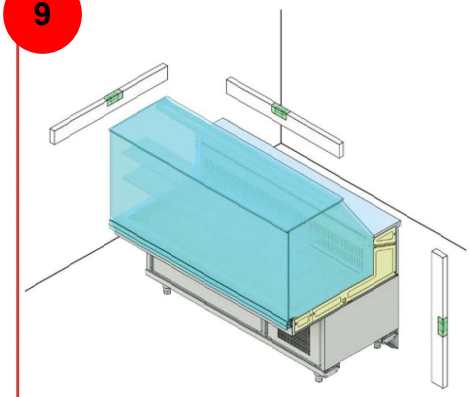

LEVELING

10

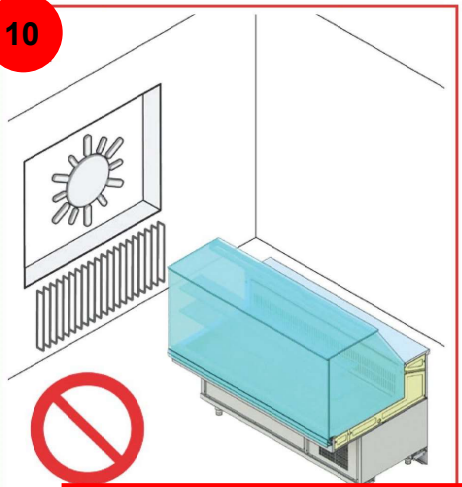

11

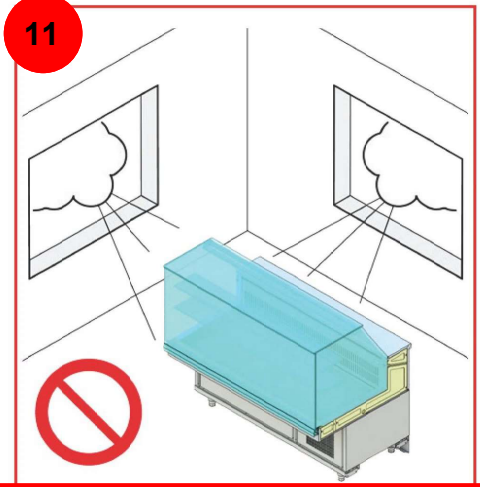

12

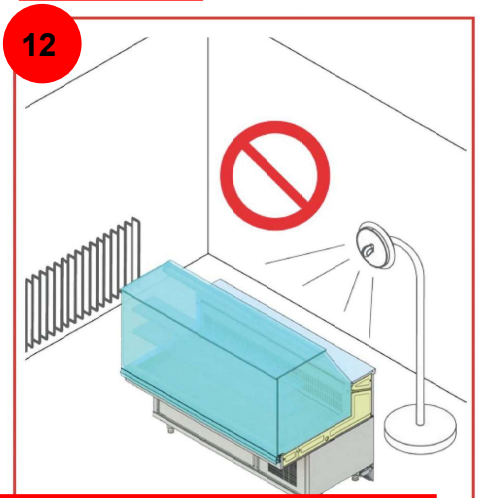

DO NOT EXPOSE THE DISPLAY CASE TO SUNLIGHT, WEATHER OR HEAT SOURCESS