

SBUX_TBOY100I

Tall Refrigerated Grab & Go

DESCRIPTION

VERTICAL SELF SERVE REFRIGERATED MERCHANDISER | double pane glass sides | adjustable s/s feet | well, back panel and top are in s/s insulated with ecological polyurethane foam | ventilated refrigeration with finned evaporator and thermostatic valve | nr.01 fix plate and nr.05 s/s height adjustable shelves | diffused led lighting to each tier | interiors and exteriors in RAL 9005 powder coating | lips to prevent product fall | digital control panel | built-in compressor | heated pan for evaporation of condensation water | night blind

Dimensions

L 1000mm x D 757 mm x H 2200 mm

** Item code may be subject to change.*
Please always refer to the final documents sent by CIAM Service Department.

CIAM | STARBUCKS

	CODE (subject to change)	REFERENCE	DESCRIPTION	each/linear meter
SBUX_TBOY100I	15NG6-3B		NTC WHITE SENSOR	each
	15UCMUR100	2.25	CONDENSING UNIT WITH NJ9232 COMPRESSOR	each
	17PA1040	2.26	LEVELING FOOT	each
	22AC.RE-PRES	5.1	ELECTRICAL RELAY FOR PRESSURE SWITCH ALARM	each
	22BS.MUR.SB	2.2	EC TERMINAL BOARD	each
	22RDI100		HEATING WIRE 18W/ML L=1090	each
	50-003-175		LOWER GRID	each
	15ECM12-10-4V	2.21	ELECTRONIC MOTORFAN	each
	15EV.MURH22P68-69	2.4	EVAPORATOR	each
	15ORIF03/CODS	2.23	WELDED HOLE	each
	15TES2/CODS/452	2.22	THERMOSTAT VALVE R452	each
	15V200-28P	2.19	D200-28 PLASTIC VALVE	each
	14-003-00019	2.17	SINGLE TEMPERED GLASS BAFFLE	each
	14-008-00290	1.3	LEFT SINGLE SIDE	each
	14-008-00291	1.4	RIGHT SINGLE SIDE	each
	15XR70T-7W0B50	2.14	CONTROL UNIT	each
	17T960X1500HFMN	2.11	BLACK NIGHT BLIND 95,7X150H	each
	22R/U29XX18BO205XS	3.1	LED STRIP 3000K 24V	linear meter
	15REPTC400/4MT	4.7	RESISTANCE FOR EVAPORATION PAN	each
	22RC/MUR10	2.3	RESISTOR	each
	22PA29998	2.13	ANTI-VANDAL SWITCH	each
	25PPTA150	2.16	PRICE LABEL STRIP	each
	15NET7T09PUN201	2.21	FAN	each
	25PL32	2.24	PLASTIC PIPE	each
	15CAJ4517Z	4.1	COMPRESSOR CAJ4517Z R404A	each
	50-034-038	1.6	RIGHT SHELF BRACKET	each
	50-034-037	1.2	LEFT SHELF BRACKET	each
	50-010-054		SHELF (without brackets)	each
	22MW24/150	5.5	LED POWER SUPPLY	each
	XSPDTBOY1000	6.1	LEFT DOOR FOR TALL BOY 1000	each
	XSPSTBOY1000	6.2	RIGHT DOOR FOR TALL BOY 1000	each

ELEVATION VIEW TAV.01

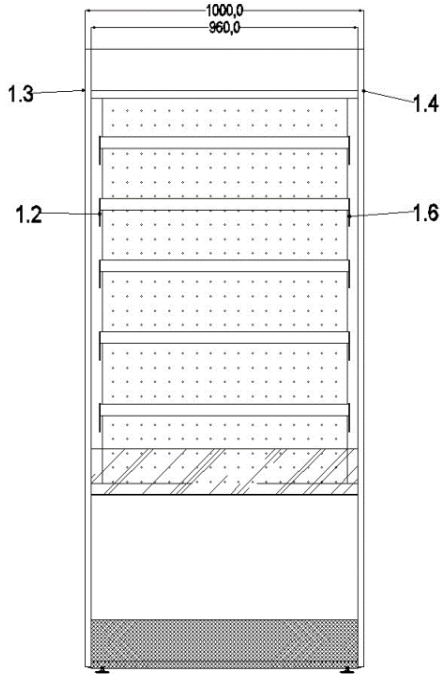

SECTION VIEW TAV.02

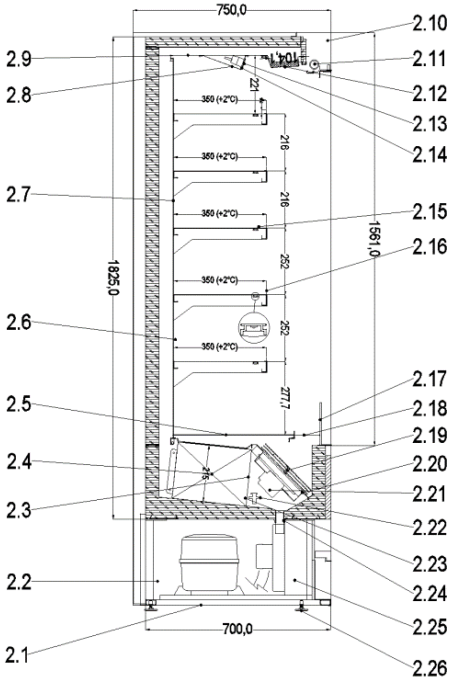

CONDENSING UNIT TAV.04

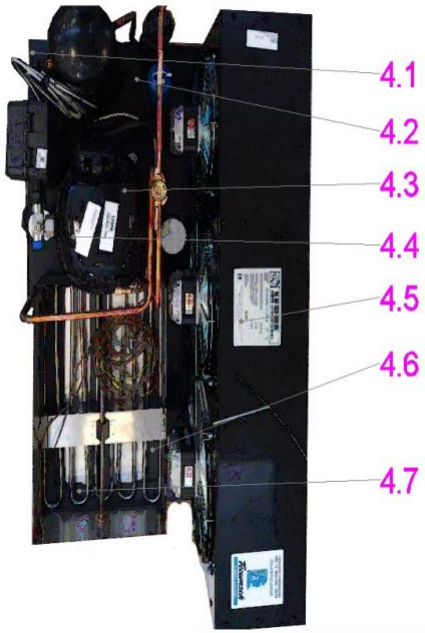

OPTIONAL TAV.06

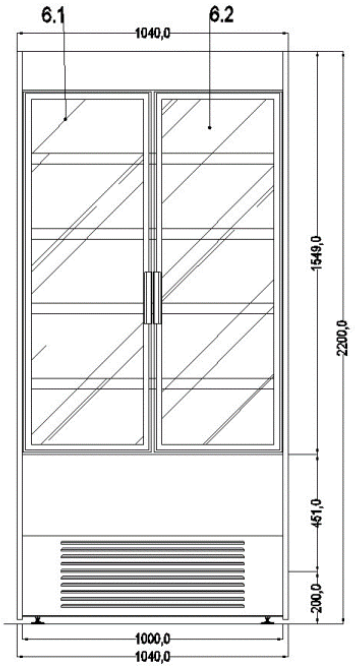

PARTICOLAR TAV.03

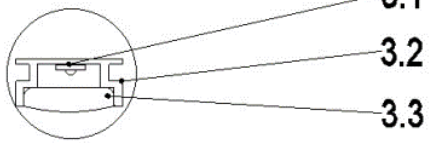

ELECTRICAL BOARD TAV.05

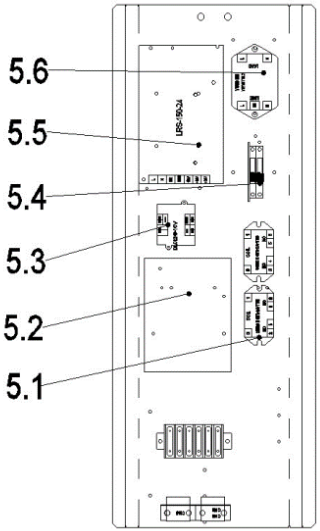



SBUX_TBOY120I

Tall Refrigerated Grab&Go

DESCRIPTION

VERTICAL SELF SERVE REFRIGERATED MERCHANDISER | double pane glass sides | adjustable s/s feet | well, back panel and top are in s/s insulated with ecological polyurethane foam | ventilated refrigeration with finned evaporator and thermostatic valve | nr.01 fix plate and nr.05 s/s height adjustable shelves | diffused led lighting to each tier | interiors and exteriors in RAL 9005 powder coating | lips to prevent product fall | digital control panel | built-in compressor | heated pan for evaporation of condensation water | night blind

Dimensions

L 1200mm x D 757 mm x H 2200 mm

** Item code may be subject to change.*
Please always refer to the final documents sent by CIAM Service Department.

	CODE (subject to change)	REFERENCE	DESCRIPTION	each/linear meter
SBUX_TBOY120I	15NG6-3B		NTC WHITE SENSOR	each
	15UCL3V4519Z/SBK	2.25	CONDENSING UNIT WITH PRESSURE SWITCH	each
	17PA1040	2.26	LEVELING FOOT	each
	22AC.RE-PRES	5.1	ELECTRICAL RELAY FOR PRESSURE SWITCH ALARM	each
	22BS.MUR_TN_SPK	2.2	EC TERMINAL BOARD	each
	22RDI100		HEATING WIRE 18W/ML L=1090	each
	50-003-026		LOWER GRID	each
	15ECM12-10-4V	2.21	ELECTRONIC MOTORFAN	each
	15EV.MURH22P68-98	2.4	EVAPORATOR	each
	15ORIF03/CODS	2.23	WELDED HOLE	each
	15TES2/CODS/452	2.22	THERMOSTAT VALVE R452	each
	15V200-28P	2.19	D200-28 PLASTIC VALVE	each
	22RC/MUR10	2.3	RESISTOR	each
	14-003-00018	2.17	SINGLE TEMPERED GLASS BAFFLE	each
	14-008-00290	1.3	LEFT SINGLE SIDE	each
	14-008-00291	1.4	RIGHT SINGLE SIDE	each
	15XR70T-7W0B50	2.14	CONTROL UNIT XR70T	each
	17T1160X1500HFMN	2.11	BLACK NIGHT BLIND	each
	22R/U29XX18BO205XS	3.1	LED STRIP 3000K 24V	linear meter
	15/CCAJ4519Z	4.1	COMPRESSOR	each
	15REPTC400/4MT	4.7	RESISTANCE FOR EVAPORATION PAN	each
	22PA29998	2.13	ANTI-VANDAL SWITCH	each
	25PPTA150	2.16	PRICE LABEL STRIP	each
	15NET7T09PUN201	2.21	FAN	each
	25PL32	2.24	PLASTIC PIPE	each
	22MW24/150	5.5	LED POWER SUPPLY	each
	50-034-038	1.6	RIGHT SHELF BRACKET	each
	50-034-037	1.2	LEFT SHELF BRACKET	each
	50-010-054		SHELF (without brackets)	each
	XSPDTBOY1200		LEFT DOOR FOR TALL BOY 1200	each
	XSPSTBOY1200		RIGHT DOOR FOR TALL BOY 1200	each

ELEVATION VIEW TAV.01

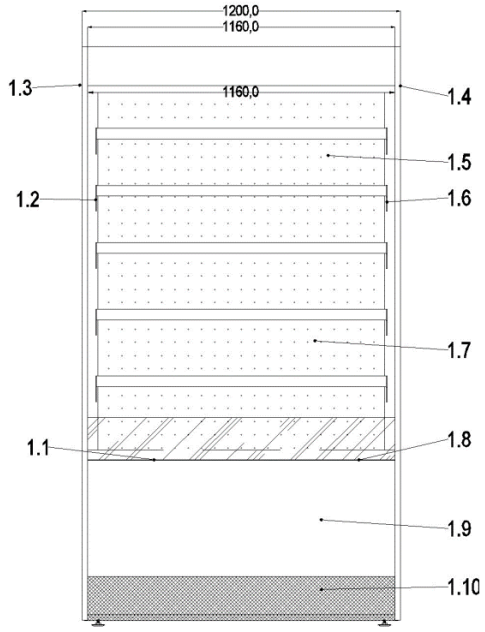

SECTION VIEW TAV.02

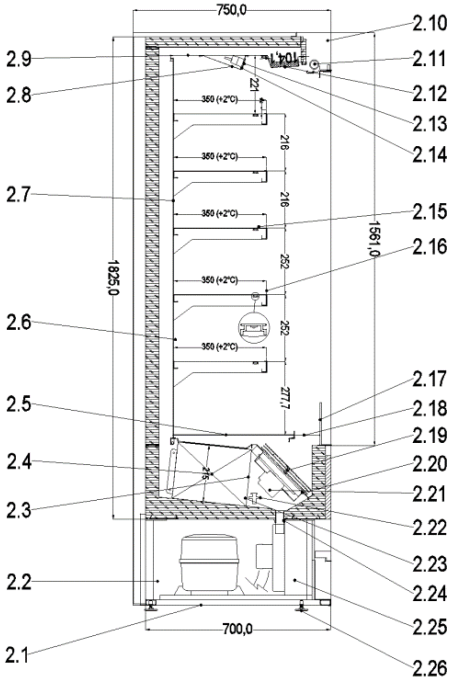

CONDENSING UNIT TAV.04

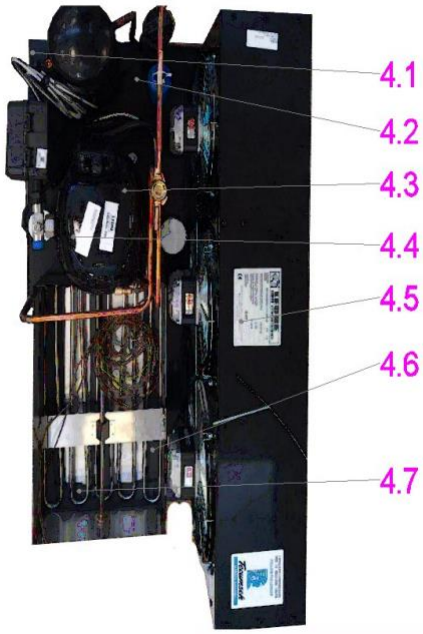

OPTIONAL TAV.06

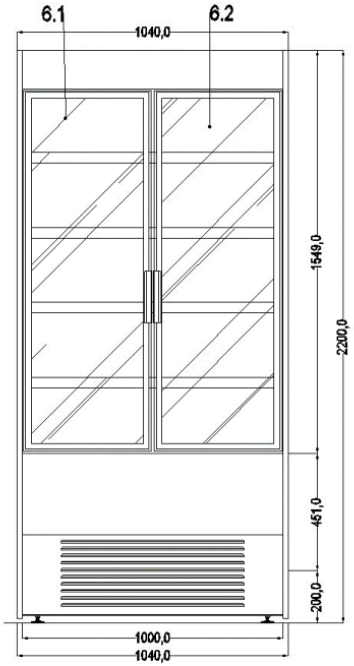

PARTICOLAR TAV.03

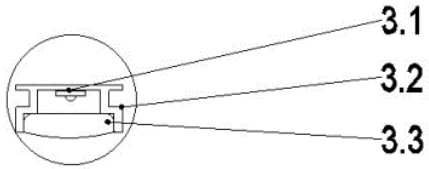

ELECTRICAL BOARD TAV.05

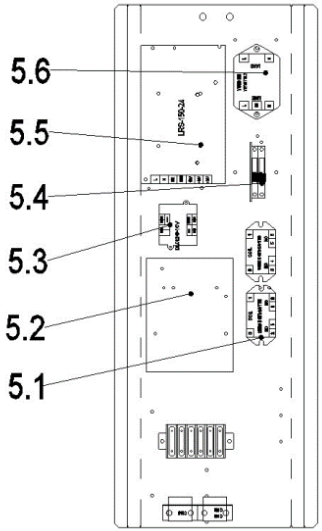



SBUX_CHIL120I

Chilled Display Case

DESCRIPTION

CHILLED DISPLAY CASE | forced air ventilation | refrigerated at deck and intermediate shelf | extra clear laminated heated glasses | sliding double-pane glass doors | insulated well with ecological polyurethane | expositive deck in siletone calypso | stone top at employee side not supplied | visible metal parts in RAL 9005 powder coating | price tag holders | fix intermediate glass shelf with diffused light 3000°K | casework counter in AISI 304 stainless steel | dry storage with s/s hinged door and intermediate shelf | temperature display repeater | digital control panel | stainless steel adjustable feet | built-in compressor and self evaporating pan for condensation water

Dimensions

L 1200mm x D 853 mm x H 1320 mm

** Item code may be subject to change.*
Please always refer to the final documents sent by CIAM Service Department.

	CODICE (subject to change)	REFERENCE	DESCRIPTION	each / linear meter
SBUX_CHIL120I	15UCHG50AT7RP	2.10	CONDENSING UNIT GAS R452 -50Hz	each
	15XH78T	1.1	DIXELL CONTROLLER	each
	17P.INOX		LEVELING FOOT	each
	22BS.TF-SB	2.19	EC TERMINAL BOARD	each
	22TM320MULTI	4.2	MULTI-NORM TRANSFORMER 324VA	each
	22TM500/CRS2	4.1	TRANSFORMER	each
	15XH-REP-0202		RELAY CABLE	each
	15EV.BM120MY	2.16	EVAPORATOR	each
	15MA6040M	2.6	AXIAL FAN	each
	15NG6-3B		WHITE NTC SENSOR	each
	15TDS/01 -		THERMIONIC VALVE	each
	15VAC24		CONDENSATION COLLECTION TRAY 2,4 LITR	each
	15VT6040A		4 BALDED ASPIRANT ALUMINIUM FAN D96	each
	15XH-REP-0202	2.2	TEMPERATURE DISPLAY	each
	22RDI300		HEATING WIRE	each
	14RCV38CR		GLASS HOLDER R4	each
	22R/U29XX18BO205XS	2.4	LED STRIP	linear meter
	14-002-01621	2.5	SINGLE TEMPERED SHELF	each
	14-008-00328	1.2 - 1.4	SLIDING DOOR CHILLED	each
	14-026-00659	2.3	STRATIFIED HEATED FRONT GLASS	each
	14-028-00141	2.3	STRATIFIED HEATED LEFT SIDE	each
	14-028-00142	2.3	STRATIFIED HEATED RIGHT SIDE	each
	14-028-00143	2.3	STRATIFIED HEATED TOP GLASS	each
	50-034-039		SHELF BRACKET	each
	50-001-305	17	PRICE HOLDER 3,6 cm x 110,1 cm	each
	50-001-306	17	PRICE HOLDER 2,2 cm x 110,1 xm	each
	22PA29998	1.3	ANTI-VANDAL SWITCH	each

ELEVATION VIEW tav.01

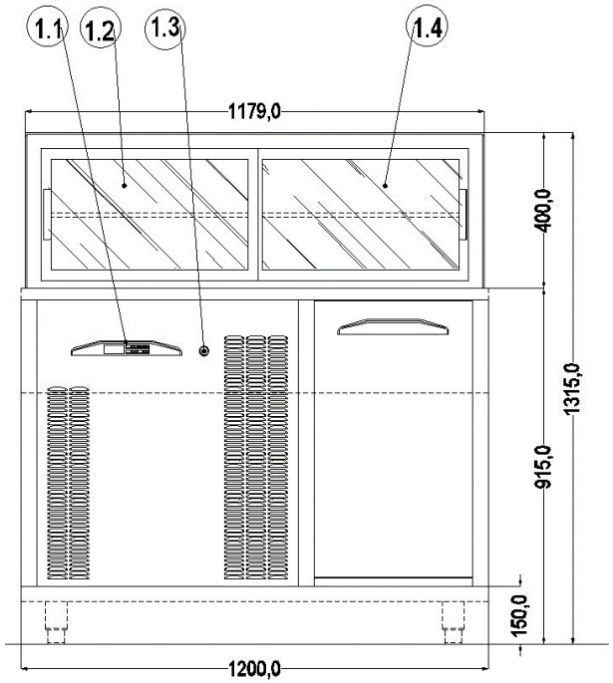

SECTION VIEW tav.02

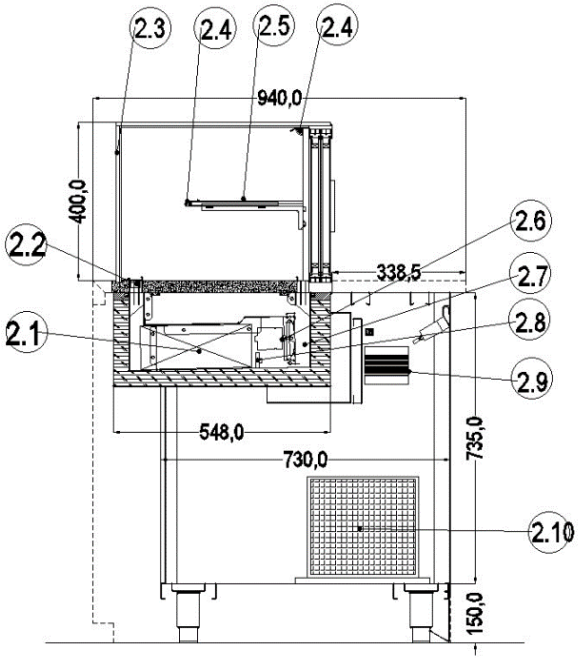

1) CONDENSING UNITSPARE PARTS tav03

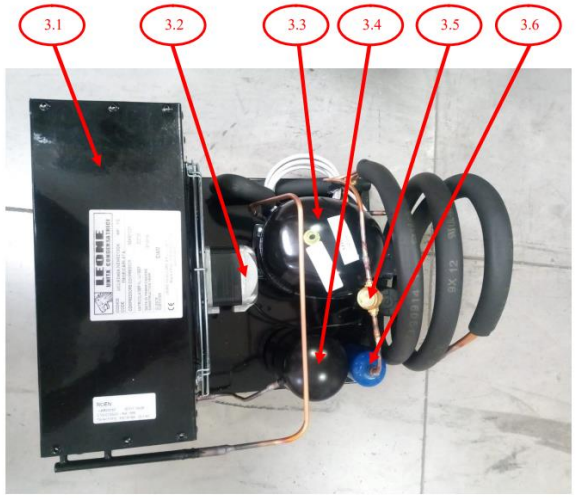

2) ELECTRICAL BOARDSPARE PARTS tav04

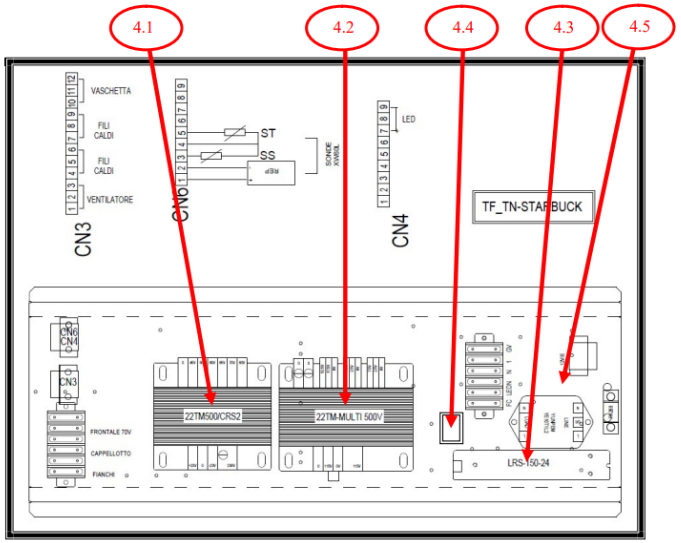



SBUX_CHIL090I

Chilled Display Case

DESCRIPTION

CHILLED DISPLAY CASE | forced air ventilation | refrigerated at deck and intermediate shelf | extra clear laminated heated glasses | sliding double-pane glass doors | insulated well with ecological polyurethane | expositive deck in siletone calypso | stone top at employee side not supplied | visible metal parts in RAL 9005 powder coating | price tag holders | fix intermediate glass shelf with diffused light 3000°K | casework counter in AISI 304 stainless steel | dry storage with s/s hinged door and intermediate shelf | temperature display repeater | digital control panel | stainless steel adjustable feet | built-in compressor and self evaporating pan for condensation water

Dimensions

L 900mm x D 853 mm x H 1320 mm

** Item code may be subject to change.*
Please always refer to the final documents sent by CIAM Service Department.

	CODE (subject to change)	REFERENCE	DESCRIPTION	each/linear meter
SBUX_CHIL090I	15UCHG33AT/RP	2.10	CONDENSING UNIT	each
	15XH78T	1.1	CONTROL UNIT	each
	17P.INOX		LEVELING FOOT	each
	22BS.TF-SB	2.19	EC TERMINAL BOARD	each
	22TM320MULTI	4.2	MULTI-NORM TRANSFORMER 324VA	each
	15CVXREP/3		REPETITOR CABLE	each
	15EV.BM130MY	2.16	EVAPORATOR	each
	15MA6040M	2.6	AXIAL FAN	each
	15NG6-3B		NTC WHITE SENSOR	each
	15TDS/01		THERMIONIC TUBE	each
	15VAC24		CONDENSATION COLLECTION TRAY 2,4 LITR	each
	15XH-REP-0202	2.2	TEMPERATURE DISPLAY	each
	22RDI250		HEATED WIRE	each
	14-002-01621	2.5	SINGLE TEMPERED SHELF	each
	14-008-00328	1.2 / 1.4	SINGLE SLIDING DOOR	each
	14-026-00188	2.3	STRATIFIED HEATED FRONT GLASS	each
	14-026-00189	2.3	STRATIFIED HEATED TOP GLASS	each
	14-028-00056	2.3	STRATIFIED HEATED LEFT SIDE GLASS	each
	14-028-00057	2.3	STRATIFIED HEATED RIGHT SIDE GLASS	each
	22R/U29XX18BO205XS	2.4	LED STRIP	linear meter
	50-034-039		SHELF BRACKET	each

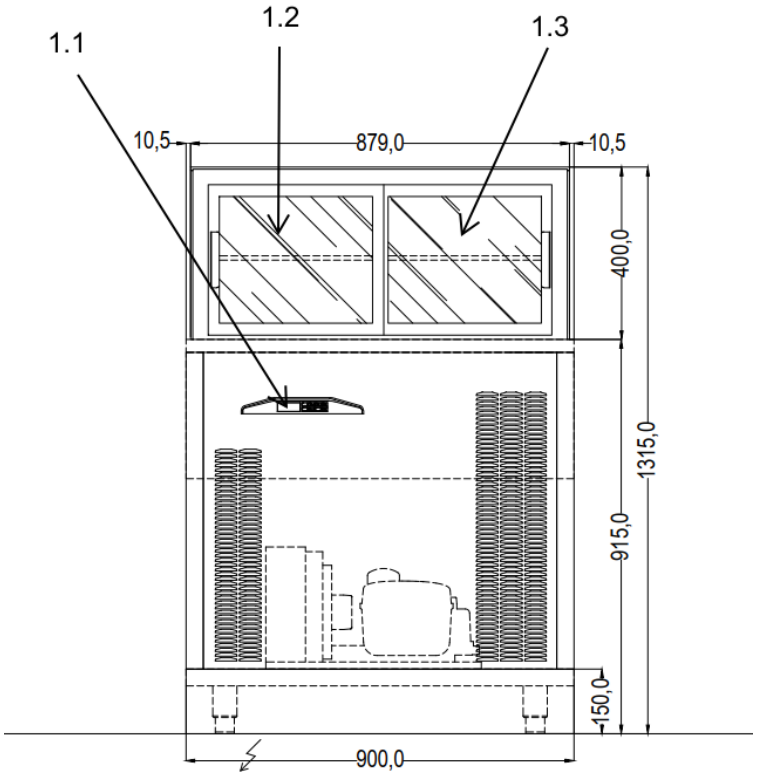

SECTION VIEW tav.02

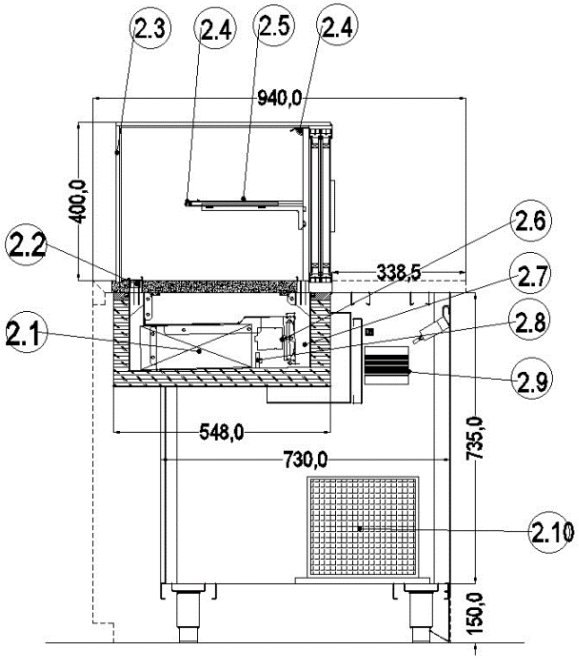

1) CONDENSING UNITSPARE PARTS tav03

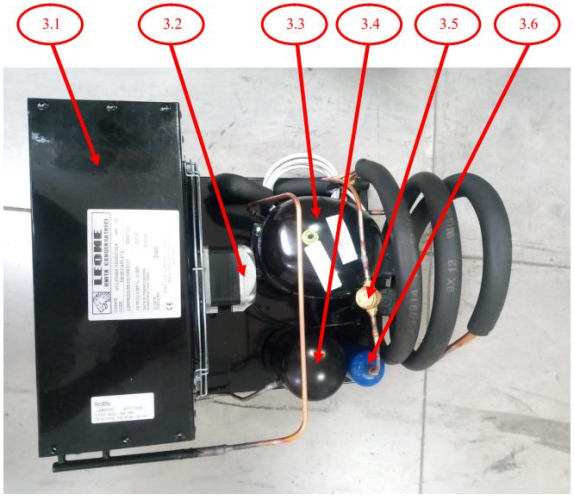

2) ELECTRICAL BOARDSPARE PARTS tav04

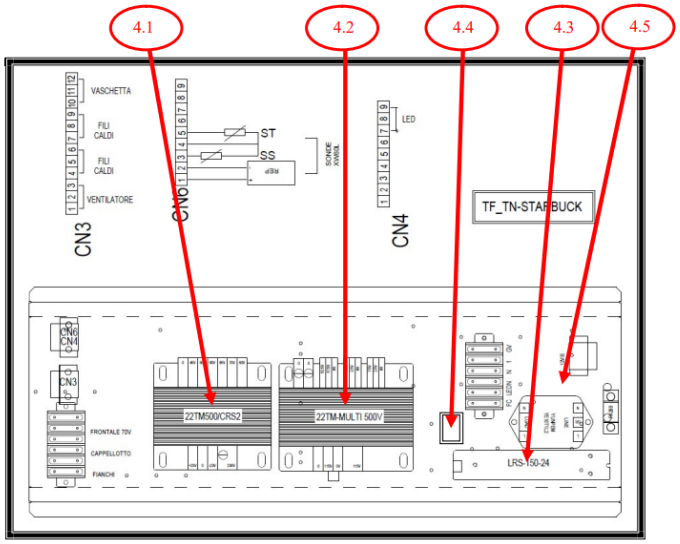



SBUX_AMBI_120HW

Ambient Display Case

DESCRIPTION

AMBIENT DISPLAY CASE | extra clear glasses joint with hardware | sliding single-pane glass doors | visible metal parts in RAL 9005 powder coating | price tag holders | fix intermediate glass shelf | diffused light 3000°K at 2 levels

Dimensions

L 1200mm x D 555 mm x H 400 mm

** Item code may be subject to change.*
Please always refer to the final documents sent by CIAM Service Department.

	CODE (subject to change)	REFERENCE	DESCRIPTION	each/linear meter
SBUX_AMBI_120HW	14-002-01084	1.3	SINGLE TEMPERED GLASS SLIDING DOOR	each
	14-002-01624	2.12	SINGLE TEMPERED GLASS SHELF	each
	14-002-02954	2.2	SINGLE TEMPERED FRONT GLASS	each
	14-037-00124	1.1	SINGLE LEFT SLIDE GLASS	each
	14-037-00125	1.2	SINGLE RIGHT SLIDE GLASS	each
	14-037-00127	2.3	SINGLE TOP GLASS	each
	14RCV38CR/VN	2.17	GLASS HOLDER R4	each
	22IN401B38	1.6	SWITCH 16A	each
	22MW24/75		POWER SUPPLY	each
	22R/U29XX18BO205XS	2.5	LED STRIPS 3000K 24V	linear meter
	50-034-039	2.11	SHELF BRACKET	each

PROSPETTO / ELEVATION VIEW - TAV. 01

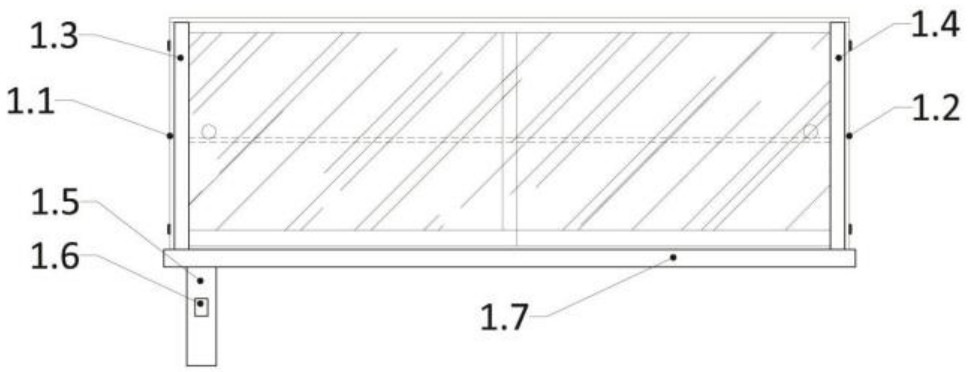

SEZIONE / SECTION VIEW – TAV. 02

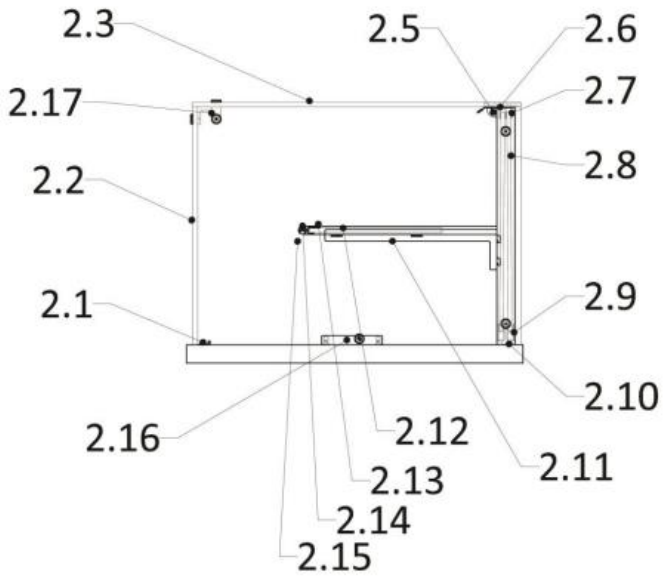



SBUX_AMBI_090HW

Ambient Display Case

DESCRIPTION

AMBIENT DISPLAY CASE | extra clear glasses joint with hardware | sliding single-pane glass doors | visible metal parts in RAL 9005 powder coating | price tag holders | fix intermediate glass shelf | diffused light 3000°K at 2 levels

Dimensions

L 900mm x D 555 mm x H 400 mm

** Item code may be subject to change.*
Please always refer to the final documents sent by CIAM Service Department.

	CODE (subject to change)	REFERENCE	DESCRIPTION	each/linear meter
SBUX_AMBI_090HW	14-002-01745	1.3	SINGLE TEMPERED GLASS SLIDING DOOR	each
	14-002-01746	2.12	SINGLE TEMPERED GLASS SHELF	each
	14-002-02953	2.2	SINGLE TEMPERED FRONT GLASS	each
	14-037-00124	1.1	SINGLE LEFT SLIDE GLASS	each
	14-037-00125	1.2	SINGLE RIGHT SLIDE GLASS	each
	14-037-00126	2.3	SINGLE TOP GLASS	each
	14RCV38CR/VN	2.17	GLASS HOLDER R4	each
	22IN401B38	1.6	SWITCH 16A	each
	22MW24/50		POWER SUPPLY	each
	22R/U29XX18BO205XS	2.5	LED STRIPS	linear meter
	50-034-039	2.11	SHELF BRACKET	each

SEZIONE / SECTION VIEW – TAV. 02

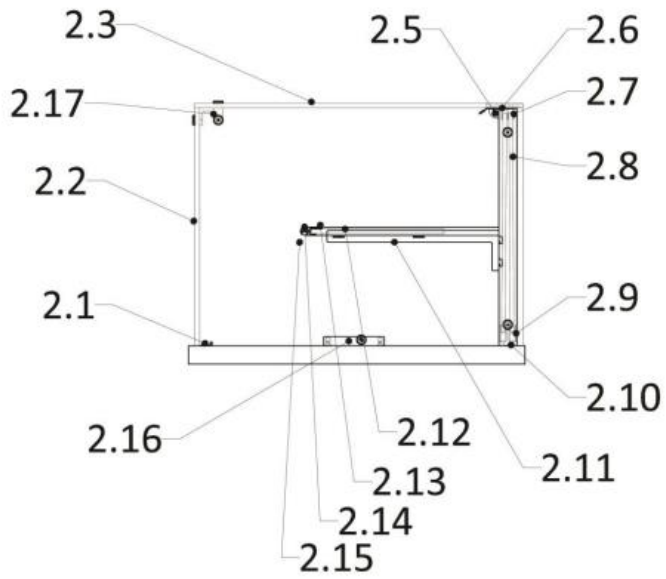



SBUX22CMBA120

Combi Case with Ambient Top

DESCRIPTION

Refrigerated GRAB & GO UNIT with AMBIENT TOP model 2022 | mm L1200+3 P888 H1165 | glass box joint with HW | Vertical sliding doors | diffused LED lighting | s/s tank insulated with ecological polyurethane | glass sides on top section| solid sides in black s/s 15/10 at base | refrigeration by forced air at grab and go section | electric and automatic defrost| digital control panel with temperature display | black FENIX Ingo 720 working top | tubular s/s base | BUILT-IN COMPRESSOR | compressor breathing at 1 side only | self evaporating pan for condensation water

Dimensions

L 1203mm x D 907 mm x H 1165 mm

** Item code may be subject to change.*
Please always refer to the final documents sent by CIAM Service Department.

	CODE (subject to change)	REFERENCE	DESCRIPTION	each/linear meter
SBUX22CMBA120	15RFKH11		R452A VALVE	each
	15RFKH-023-01		WELDED HOLE	each
	22BS.COMBI_SB.4-S	/	EC TERMINAL BOARD	each
	15EV.P12MYAY	1	EVAPORATOR	each
	15REDP900	/	DOUBLE RESISTOR	each
	15ECM12-10-4V	2	ELECTRICAL MOTORFAN	each
	15XH-REP-0202	3	TEMPERATURE DISPLAY	each
	22RDI450	4	HEATED WIRE	each
	15XH78T	5	CONTROL UNIT XH78T	each
	15VAC24	8	CONDENSATION COLLECTION TRAY 2,4 LITR	each
	22RPTC/316L	9	RESISTOR	each
	17PA1060	10	LEVELING FOOT	each
	50-003-00130	11	MOTOR GRILL (OPERATOR SIDE)	each
	22MW24/75	/	POWER SUPPLY 75W	each
	22R/U29XX18BO205XS	14	LED STRIP 3000K 24V	linear meter
	14RCV38CR	17	GLASS HOLDER R4	each
	14-002-03492	18	SINGLE TEMPERED SIDE	each
	14-002-03491	19	SINGLE TEMPERED GLASS BAFFLE	each
	14-037-00133	20	SINGLE TEMPERED TOP GLASS	each
	14-037-00132	21	SINGLE TEMPERED FRONT GLASS	each
	51-031-00674	28	RIGHT SLIDING DOOR	each
	51-031-00673	29	LEFT SLIDING DOOR	each
	15UCR1V6217/SBK		CONDENSING UNIT (UC R452a NEK6217GK,	each

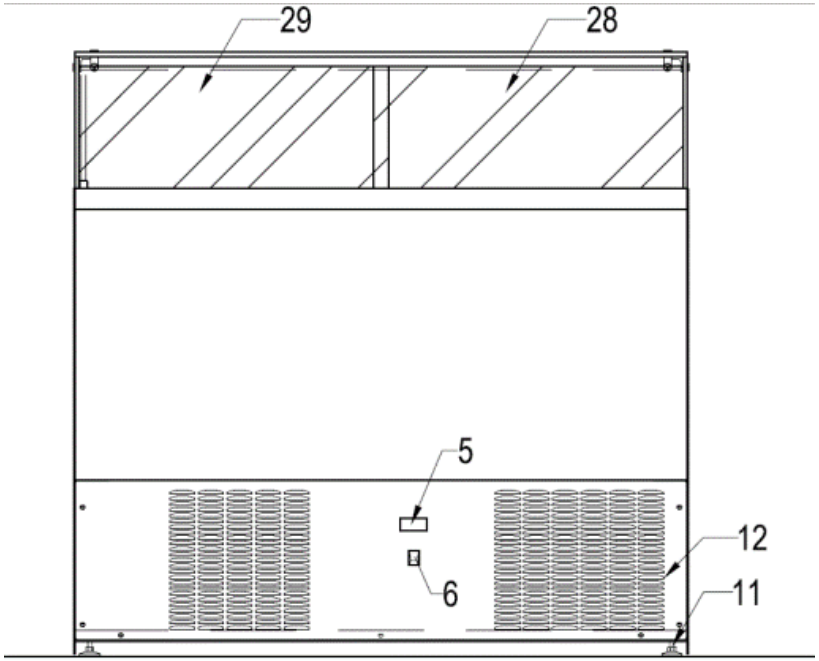

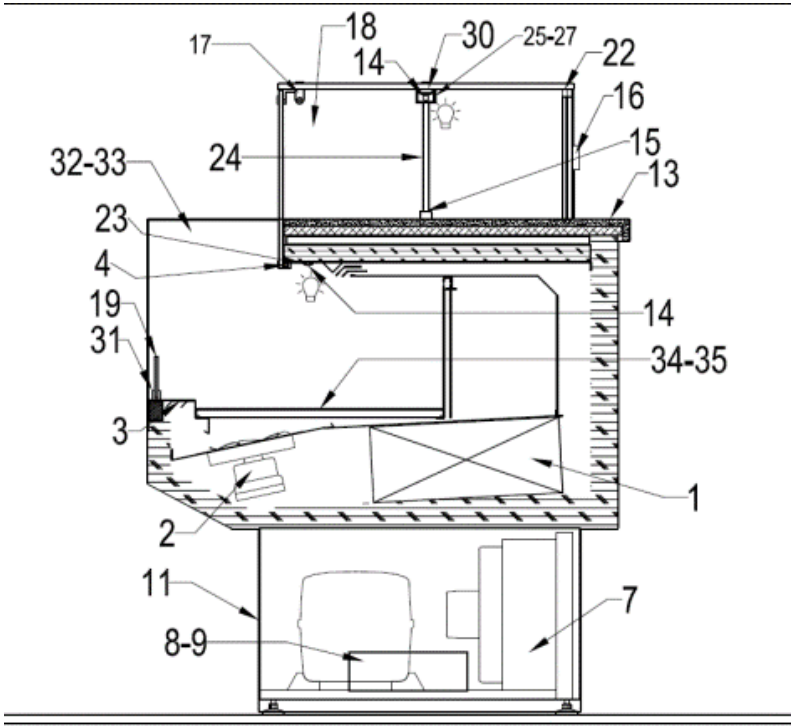

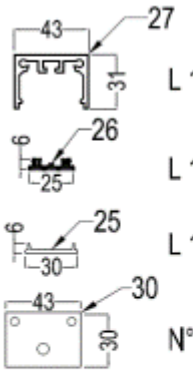

L 1180mm	CODICE: 11-007-00091
L 1140mm	CODICE: 11-009-00126
L 1147mm	CODICE: 51-029-00096
N°2	CODICE: 50-036-00076



L 1110mm	CODICE: 11-009-00127

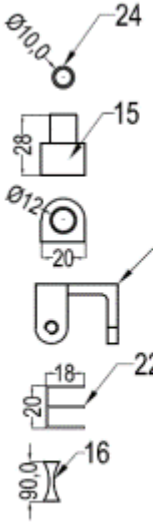

N° 1 L= 210 mm	CODICE: 11-017-00030
N°1	CODICE: 14BFF20CR/F
N°1	CODICE: 14RCV38CR
L1184 mm	CODICE: 11-026-00082
L44 mm	CODICE: 74MN.44AH



SBUX22COMBI120

Combi Display Case

DESCRIPTION

Refrigerated COMBI GRAB & GO UNIT model 2022 | mm L1200+3 P888 H1165 | heated glass box joint with HW | Vertical sliding doors | diffused LED lighting | s/s tank insulated with ecological polyurethane | glass sides on top section | solid sides in black s/s 15/10 at base | refrigeration by forced air | actuator with switch to convey refrigeration only at the g&go section or top and bottom | electric and automatic defrost| digital control panel with temperature display | black FENIX Ingo 720 working top | tubular s/s base | BUILT-IN COMPRESSOR | compressor breathing at 1 side only | self evaporating pan for condensation water

Dimensions

L 1203mm x D 907 mm x H 1165 mm

** Item code may be subject to change.*
Please always refer to the final documents sent by CIAM Service Department.

	CODE (subject to change)	REFERENCE	DESCRIPTION	each/linear meter
SBUX22COMBI120	15RFKH-023-01	/	WELDED HOLE	each
	15RFKH11		R452A VALVE	each
	22AT/TA32	12	ELECTRIC ACTUATOR	each
	22BS.COMBI_SB.3-S	/	EC TERMINAL BOARD	each
	22/MY2IN220240ACS	/	RELAY 230 VOLT	each
	22RE25A	/	RELAY DOUBLE CONTACT	each
	22RPTC/316L	11	RESISTOR 230V	each
	15VAC24	10	CONDENSATION COLLECTION TRAY 2,4 LITR	each
	22IN401B38	8	SWITCH ON/OFF BUTTON	each
	22P/868-1506	7	ROCKER SWITCH	each
	15XH78T	6	CONTROL UNIT XH78T	each
	22RDI229	5	HEATED WIRE 18W L=1090	each
	22RDI100	4	HEATED WIRE 18W/ML L=1090	each
	15XH-REP-0202	3	TEMPERATURE DISPLAY	each
	15ECM12-10-4V	2	ELECTRICAL MOTORFAN	each
	15REDP900	/	DOUBLE RESISTOR	each
	22LM24/50	/	POWER SUPPLY FOR LED 24V	each
	22LM24/75	/	POWER SUPPLY 75W	each
	15EV.P12MYAY	1	EVAPORATOR	each
	17PA1060	13	LEVELING FOOD	each
	22MW48/100	/	POWER SUPPLY 100W	each
	22R/U29XX18BO205XS	17	LED STRIP	linear meter
	17MN.44AH	19	HANDLE DOR SLIDING DOORS	each
	14RCV38CR	20	GLASS HOLDER R4	each
	14-002-03492	21	SINGLE TEMPERED SIDE	each
	14-002-03491	22	SINGLE TEMPERED GLASS BAFFLE	each
	14-037-00133	23	SINGLE TEMPERED TOP GLASS	each
	14-043-00011	24	SINGLE TEMPERED FRONT GLASS	each
	51-031-00674	33	RIGHT SLIDING DOOR	each
	51-031-00673	34	LEFT SLIDING DOOR	each
	15UCR1V6217/SBK		CONDENSING UNIT (UC R452a NEK6217GK,	each

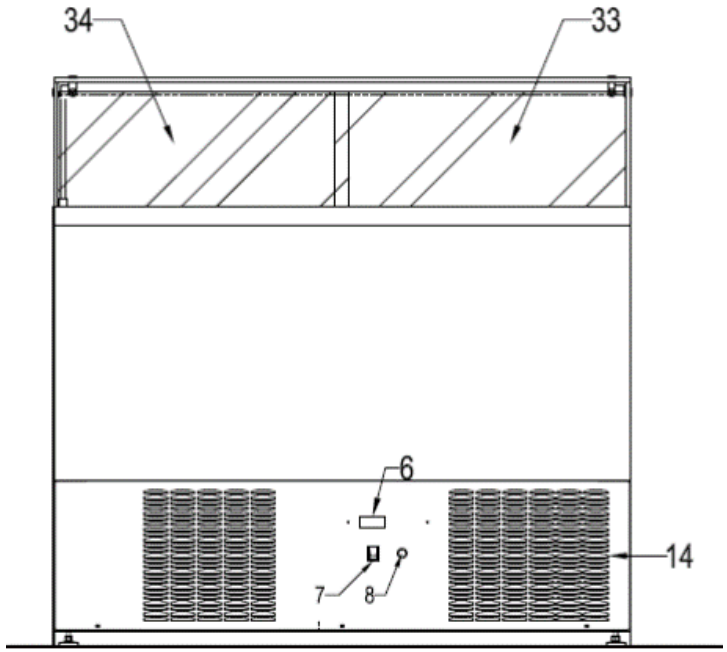

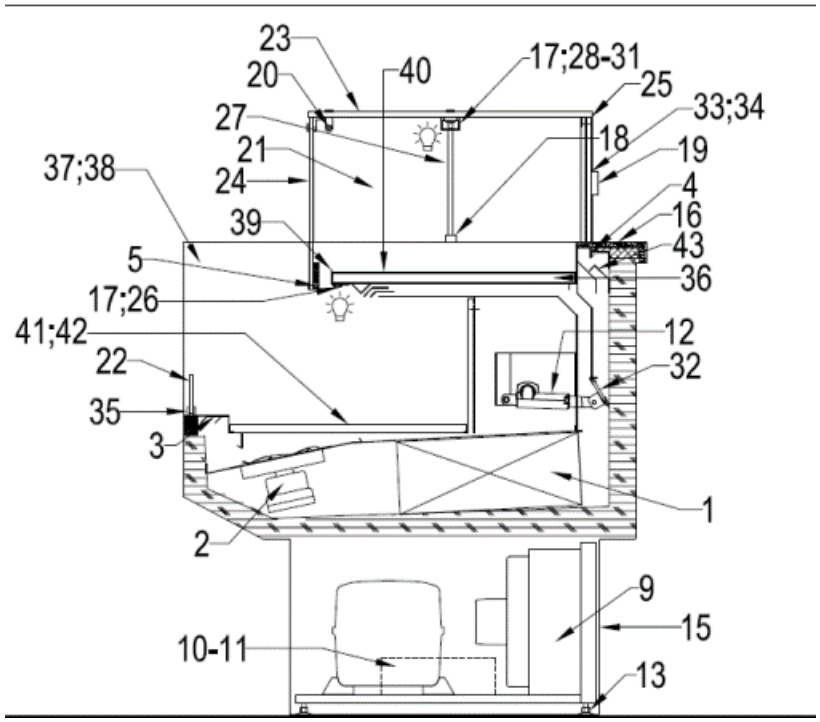

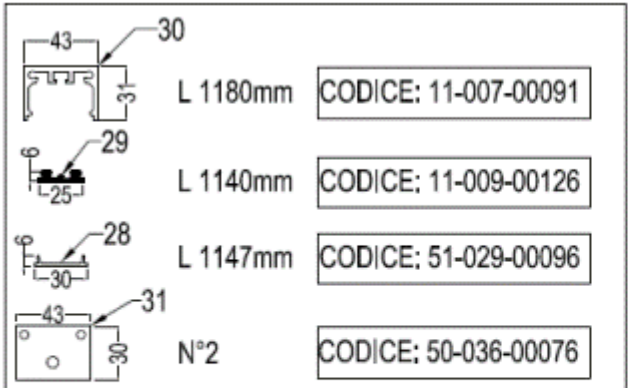

L 1180mm	CODICE: 11-007-00091
L 1140mm	CODICE: 11-009-00126
L 1147mm	CODICE: 51-029-00096
N°2	CODICE: 50-036-00076



L 1110mm	CODICE: 11-009-00127

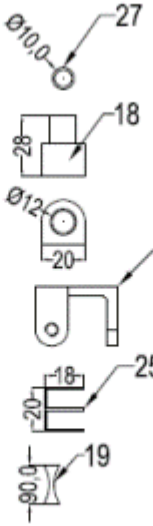

N° 1 L= 210 mm	CODICE: 11-017-00030
N°1	CODICE: 14BFF20CR/F
N°1	CODICE: 14RCV38CR
L1184 mm	CODICE: 11-026-00082
L44 mm	CODICE: 74MN.44AH



SBUX_GGOD_120I

Low Grab&Go with Refill Door

DESCRIPTION

REFRIGERATED VENTILATED LOW GRAB & GO SHOWCASE WITH REFILL DOORS AT EMPLOYEE SIDE | refrigerated base deck, 2 height adjustable s/s shelves | insulated well with ecological polyurethane and coated by stainless steel | double pane glass sides | interiors and exteriors in RAL 9005 powder coated | LED lighting on each shelf and ceiling | electric and automatic defrost | digital control panel with temperature display | front glass bafe | solid back | s/s chassis on adjustable feet | built-in compressor | heated pan for evaporation of condensation water | compressor breathing from back to front

Dimensions

L 1200mm x D 843 mm x H 1315 mm

** Item code may be subject to change.*
Please always refer to the final documents sent by CIAM Service Department.

	CODE (subject to change)	REFERENCE	DESCRIPTION	each/linear meter
SBUX_GGOD_120I	15ECM12-10-4V	1.20	ELECTRICAL MOTORFAN	each
	15EV.P12MYAY	1.17	EVAPORATOR	each
	15G200P	/	PLASTIC RING	each
	15ORIF03/CODS	/	WELDED HOLE	each
	15TS2/CODS/452	/	TS2 VALVE	each
	15UCMUR100(gas 452a)	1.19	CONDENSING UNIT	each
	15V200-28	/	VALVE	each
	15XW60L/REP	1.7	CONTROL UNIT	each
	22BS.MUR60	/	EC TERMINAL BOARD	each
	22MW24/150	/	POWER SUPPLY 150W	each
	22R/U29XX18BO205XS	1.14	LED STRIP 3000K-24V	linear meter
	15UCL2V4517PT/RP (gas	1.19	CONDENSING UNIT	each
	15REPTC400/4MT	/	CONDENSATION COLLECTION TRAY 2,4	each
	14-002-01747	1.21	TEMPERED SINGLE GLASS BAFFLE	each
	14-008-00399	1.1	LEFT SIDE GLASS	each
	14-008-00400	1.2	RIGHT SLIDE GLASS	each
	14-016-00082	1.15	DOUBLE GLAZING GLASS DOOR	each
	14-016-00083	1.15	DOUBLE GLAZING GLASS DOOR	each
	14-037-00069	1.11	TOP GLASS	each
	SBRAS0007	/	VERTICAL GASKET	each
	25-100-00007	/	DOOR GASKET	each
	50-034-00013	1.24	LEFT SHELF BRACKET (L=371)	each
	50-034-00014	1.24	RIGHT SHELF BRACKET (L=371)	each
	50-034-00015	1.24	LEFT SHELF BRACKET (L=481)	each
	50-034-00016	1.24	RIGHT SHELF BRACKET (L=481)	each
	50-010-00007	1.25	SHELF L=371	each
	50-010-00008	1.25	SHELF L=481	each
	50-040-00016	1.9	LOWER MOTOR GRILL	each

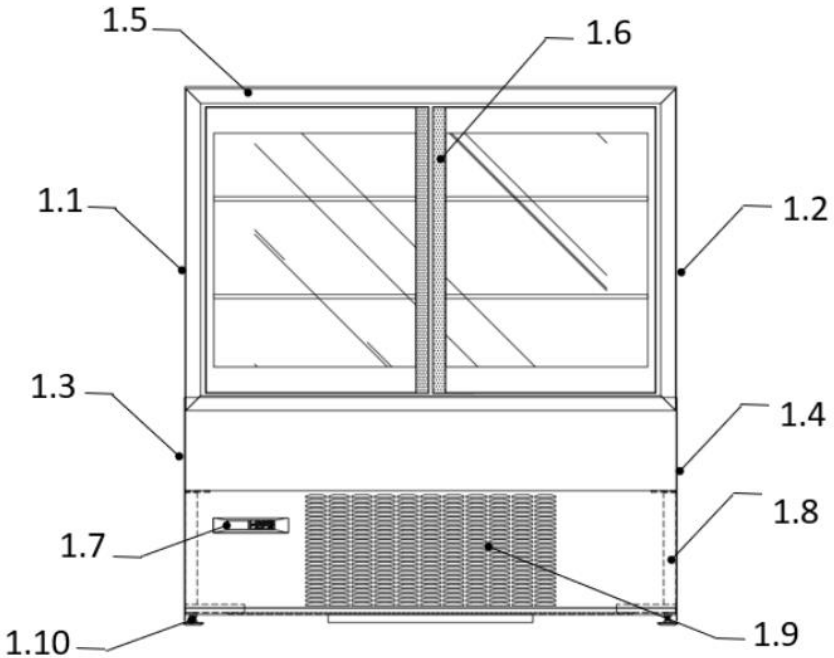
1.5
1.6
1.1
1.2
1.3
1.4
1.7
1.8
1.10
1.9

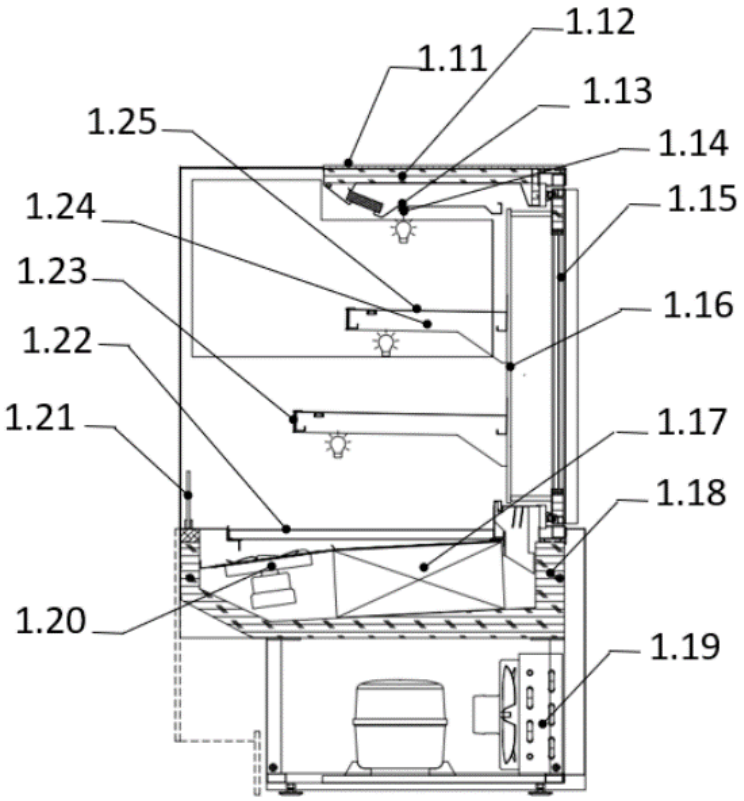
1.12
1.11
1.13
1.25
1.14
1.24
1.15
1.23
1.16
1.22
1.21
1.17
1.18
1.20
1.19