Low Grab&Go

Refrigerated Ventilated Showcase

SBUX_G&GO_120I
SBUX_G&GOD_120I



User manual and warnings

CIAM s.p.A.
06081 Petrignano d'Assisi
PG – Italy
tel. 075 80161
Fax 075 8016215
http://www.ciamgroup.it
e-mail: info@ciamgroup.it

CIAM
REFRIGERATION DESIGN

ISO 9001

SUMMARY

GENERAL INFORMATION	2 / EN
DATA SHEET	8 / EN
SAFETY	9 / EN
EQUIPMENT DIMENSIONS	16 / EN
LOAD LIMITS	17 / EN
MAXIMUM LOADS	18 / EN
CE DATA PLATE	18 / EN
QUICK COMMANDS	19 / EN
CLEANING AND MAINTENANCE	20 / EN
ELECTRICAL DRAWING	22 / EN
COOLING DIAGRAM	25 / EN
INSTALLING AND OPERATING INSTRUCTIONS	26 / EN

1 - GENERAL INFORMATION

1.1 General information on the manual and its use



This manual must be read very carefully before transporting, installing, or using a CIAM group Spa appliance.

This documentation is prepared in compliance with the provisions of Directive 2006/42/EC.
This manual indicates the intended use of the refrigerated display cabinet and provides instructions for transportation, installation, assembly and use of the same.
The contents of this manual are strictly technical in nature and are the property of **CIAM group Spa**. It is therefore forbidden to reproduce, disclose or modify partially or completely its contents without written authorisation.
The owner company protects its rights according to the law.

1.2 Symbols used in the manual to facilitate reading



WARNING - NOTE! Read the following instructions carefully.
It indicates a warning or note about key features or useful information.
Pay attention to the text blocks indicated by this symbol



GENERIC DANGER - ATTENTION! Danger sign
Text marked with this symbol indicates that failure to follow the instructions provided may result in damage to refrigerated cabinet equipment and physical injury or death.



VOLTAGE EQUIPMENT - ATTENTION! Danger sign
The text marked with this symbol indicates that the operation to be described involves the risk of electric shock and therefore of electrocution.



DANGER OF BURNS - ATTENTION! Danger sign
The text marked with this symbol indicates that the operation to be described involves the risk of scalds and burns.



CUTTING DANGER - ATTENTION! Danger sign
The text marked with this symbol indicates that the operation to be described involves the risk of cutting.



PROHIBITED! - ATTENTION! Prohibition sign
It reports operations that must never be performed



PROHIBITED! - ATTENTION! Prohibition sign
It is forbidden to remove the safety and protection devices.



REMOVE VOLTAGE! - ATTENTION! Obligation sign
Before any intervention on the refrigerated display cabinet it is mandatory to turn off the power supply of the same.



WEAR PERSONAL PROTECTION CLOTHING! ATTENTION! Obligation sign
Before each intervention on the refrigerated display cabinet, it is essential to wear the PPE (personal protective equipment) highlighted by the mandatory signal.



VISUAL OBSERVATION
It indicates to the reader that they must perform a visual inspection. This symbol is also found in the operating instructions. The user is required to read a measurement value, to check a signal, etc.



HEARING OBSERVATION
It indicates to the reader that they must perform an auditory observation. This symbol is also found in the operating instructions. The user is required to listen for an operating noise.



SPECIAL TOOL
It indicates that it is operationally necessary to use a tool or special equipment.



AVOID DAMAGING THE MATERIAL
Indication of a high risk of damage to a part, for example using a incorrect tool or performing an assembly following an incorrect procedure.



AUTHORISED TECHNICIAN. Text marked with this symbol indicates that the operation to be described must be performed by an operator with particular tasks and qualifications. Paragraph 1.7 contains a detailed explanation of the qualifications.

1.3 Warnings for the purchaser

The manual, similarly to the EC certificate of conformity, is an integral part of the refrigerated display cabinet and must always accompany it in every movement or resale. The user must keep this documentation intact, to allow consultation, throughout its life span.
It must be carefully stored in a place known to the responsible persons, to the persons designated to transportation, installation, use, maintenance, repair, final disposal, etc.



This manual is to be considered an integral part of the refrigerated display cabinet and must be kept until final demolition of the same. In case of loss or destruction it is possible to request a copy from CIAM group Spa specifying exactly the model, serial number and year of production.

Make sure that all users have thoroughly learned the rules of use and the meaning of the symbols shown on the refrigerated display cabinet.
Possible accidents can be avoided by following these technical instructions compiled with reference to the **relevant EEC directives** . In any case, always comply with the national safety regulations.

The manuals enclosed with this manual of the **CIAM group Spa** company are the exclusive property of the respective manufacturers and are therefore subject to the rules imposed by the same manufacturers. They are in any case protected by copyright.



The annexed manuals, referred to in the CIAM group Spa manual, must be carefully read ensuring familiarity with their contents, as they are an integral part of the regulations government safety and correct use of the CIAM group Spa equipment.

The manual reflects the manufacturing technology at the time of supply.The manufacturer reserves the right to modify its products in any way it deems necessary, with no obligation to update manuals and machines relating to previous manufacturing batches.

The manufacturer declines any responsibility for production anomalies and/or for damage caused by the machine to property, persons and animals in the following cases:

- Improper use of the system or use by unsuitable or authorised personnel.
- Power defects
- Insufficient or poor periodic maintenance
- Modifications or interventions not agreed upon and not authorised by the manufacturer
- Use of spare parts that are not original or not specific to the model
- Full or partial failure to comply with these instructions

Responsibility for application of the safety prescriptions listed below is the responsibility of the technical personnel designated to the activities envisaged on the machine, who must make sure that the authorised personnel are qualified to perform the required activity:

- Ensure familiarity with and strictly follow the instructions contained in this document
- Ensure familiarity with and apply the general safety regulations applicable to the machine.
- Failure to comply with the safety regulations can result in injury to personnel and damage to components
- The control unit of the machine.
- Reading, although exhaustive, of this manual cannot under any circumstances replace the adequate experience of the operators.
- The user can, at any time, contact the retailer to request further information in addition to that contained in this document, as well as to indicate improvement proposals.

CIAM group Spa declines all responsibility due to negligence and failure to comply with these instructions.

Use only and exclusively original spare parts. **CIAM group Spa** is not responsible for any damage caused by the use of non-original spare parts.

CIAM group Spa is only responsible for the instructions provided in the original ITALIAN language: it can be problematic to fully verify any translations.

This is why your assistance is invaluable !!

The language translations of technical manuals are very important and are essential for correct use of the machines. **CIAM group Spa** has always used mother-tongue translators specialised in Technical / Industrial translations, but this cannot guarantee the absolute accuracy of translations and the use of terminologies that is always appropriate to the specific sector.
For this reason **CIAM group Spa** asks each of its customers, to help us improve the service offered, to report any translation errors, poorly translated texts or other issues.
We therefore ask you to report by fax or by e-mail the texts that you consider unclear, explaining the reasons for this, and if possible also communicating the correct text.
We will send you the updated manual in case of changes to the manual following your notification.



info@ciamgroup.it



+39 075 8016215

Thank you for your collaboration.

1.4 Introduction

CIAM group Spa has always used the best quality materials and their introduction into the company, storage and use in production is constantly checked to ensure the absence of damage, deterioration and malfunctions.
All the construction elements have been designed and manufactured to guarantee a high standard of safety and reliability.
All refrigerated display cabinets are subjected to strict testing before delivery, nevertheless it should be remembered that good performance over time of the product purchased depends on correct use and adequate maintenance.
We therefore invite you to read this manual scrupulously as it contains the indications necessary to maintain the aesthetic and functional characteristics of your display cabinet.



In order to avoid compromising the machine's functionality and safety, particularly complex installation and maintenance activities are not documented in this manual and are carried out exclusively by specialist technicians of the undersigned company.

The use and maintenance manual contains the information necessary for understanding the operating modes of the refrigerated display cabinet and its correct use, in particular: the technical description of the various functional groups, equipment and safety systems, operation, use of the instrumentation and the interpretation of any diagnostic messages, main procedures and information regarding ordinary maintenance interventions.
For correct use of the machine it is assumed that the working environment is adequate to the current regulations in terms of safety and hygiene.

1.5 Manufacturer's contact details

Manufacturer:	CIAM Spa
Address:	Viale dei Pini, 9
	06081 Petrignano di Assisi (PG) Italy
Telephone:	(+39) 075 80161
Fax:	(+39) 075 8016215
Internet:	www.ciamgroup.it
E-mail:	info@ciamgroup.it

1.6 Instructions to request interventions

For assistance, the user must contact the dealer from which the equipment was purchased. For any type of information or clarification concerning use, maintenance, installation, etc. the undersigned company is always available to respond to Customer requests via the e-mail address:

service@ciamgroup.it

1.7 Personnel

This manual is addressed both to the operator and to the technicians authorised to install and maintain the machine.
The machine operators must not perform operations that are reserved for repairers or installers. **CIAM group Spa** is not liable for damages resulting from failure to comply with this prohibition.
A number of professional profiles are identified according to the degree of difficulty of certain operations of installation, operation and maintenance of the refrigerated display cabinet:



SPECIALIST INSTALLER
The specialist installer of **CIAM group Spa** is able to carry out all the assembly operations of the mechanical parts, the wiring of the various systems and initial start-up of the refrigerated display cabinet at the Customer's premises. This operator also has the task of training the personnel responsible for operating the machine and carrying out its testing operations.



USER
Specialist personnel assigned to using the refrigerated display cabinet.
The operator must be perfectly familiar with all the command and control devices and must be able to carry out the following operations through use of the appropriate commands:
• Loading/unloading of products into the display cabinet.
• Setting of the operating temperatures.
• Cleaning operations, recording of control devices during operation
• Making sure that the safety devices are in a good condition and that they are functional.
• Checking of the overall integrity of the machine and its correct operation.



REPAIR TECHNICIAN
The technician/repairer must be perfectly familiar with all the command and control devices of the machine and must be able, if necessary, to operate it and make it work.
The repairer must be able to carry out all the operations of handling and transporting, checking, adjusting and replacing the mechanical and electrical parts and the devices of the machine, which are part of the routine and extraordinary maintenance operations.
They must be authorised by **CIAM group Spa**.

1.8 Applied directives and technical standards of reference

The Refrigerated Display Cabinets have been designed, built and tested in compliance with the following Community directives:
• Machinery directive 2006/42/EC regarding approximation of the laws of the Member States relating to machinery
• Directive 2014/35/EU - Low Voltage
• Directive 2014/30/EU - Electromagnetic Compatibility
• Directive 2011/65/EU - Restriction on the use of certain hazardous substances in electrical and electronic equipment

The harmonised reference standards according to which the unit has been tested and approved are:
• CEI EN 60 335-1 - Safety of household electrical appliances
• CEI EN 60 335-2-89 - Particular requirements for refrigerators

ENVIRONMENTAL CLIMATIC CLASSES

These refrigerating display cabinets have been verified in compliance with climate class 4 (30°C; R.H. 55%):
It remains excluded from the scope of the EEC 97/23 directive (PED) as it falls under Art.3 paragraph 3

RISK ANALYSIS

The risk analysis carried out and the solutions implemented by **CIAM group Spa**made it possible to eliminate most of the residual risks.
The obligation to adhere to the instructions given in this manual, which contains the technical information necessary for correct installation, commissioning, use and maintenance, remains the same.

SCHEDA TECNICA – DATA SHEET

SERIE / SERIES		LOW GRAB & GO
Potenza media consumata/ Average consuming	**Kw/h**	1.2
Potenza corrente max assorbita vetrina/ Power current max absorbed showcase	**W**	1600
	A	7.2
Potenza frigorifera nesessaria/ Cooling power	**W**	2200
Peso vetrina/ Weight	**Kg**	220/330
Temperatura di espansione di riferimento/ Reference expansion temperature	**°C**	-10

SERIE / SERIES		LOW GRAB & GO WITH ACCESS DOOR
Potenza media consumata/ Average consuming	**Kw/h**	1.35
Potenza corrente max assorbita vetrina/ Power current max absorbed showcase	**W**	1700
	A	7.5
Potenza frigorifera nesessaria/ Cooling power	**W**	2200
Peso vetrina/ Weight	**Kg**	240/360
Temperatura di espansione di riferimento/ Reference expansion temperature	**°C**	-13

CARATTERISTICHE COMUNI - COMMON CHARACTERISTICS		
Classe climatica - Ambiente/ Climate class - Emvironment	**N°/HR%/°C**	3/60%/25°
Temperatura esercizio vetrina/ Operating temperature showcase	**°C**	+4/+8
Alimentazione elettrica/ Electric power supply	**V**	230
	PH	1
	Hz	50
Gas refrigerante / Refrigerant gas		R452A
Tipo di refrigerazione / Refrigeration type		VENTILATED
Tipo di sbrinamento / Defrost type		AUTOMATIC/ELECTRIC
Illuminazione / Lighting		LED 3000K
Vaschetta evaporacondensa/ Condensate water discharge		SELF HEATING PAN

3 - SAFETY

3.1 General information

The purchaser must instruct the personal assigned to use on the risks, on the safety devices and on the general rules on accident prevention foreseen by the Community directives and by the legislation of the country where the refrigerated display cabinet is installed.

Users/operators must be aware of the position and operation of all controls and features of the machine.
They must also have read this manual in full.
Maintenance interventions must be carried out by qualified operators after having appropriately prepared the machine.



Unauthorised tampering with or replacement of one or several parts of the machine, the use of accessories that modify use of the same and the use of replacement materials other than those recommended, may become the cause of accident risks.



Before carrying out any type of operation, the equipment must always be disconnected from the power supply.



Interventions on electrical parts or components of the refrigeration system must be carried out by specialist personnel in full compliance with current regulations.

3.2 Staff training



The machine is intended for professional use

The purchaser must ensure that the personnel, responsible for using the machine and the maintenance technician, are properly trained and instructed.
For this purpose, the manufacturer is available for advice, clarifications and anything else to ensure the operator and technicians make correct use of the machine.
The manufacturer can be contacted by e-mail: service@ciamgroup.it.

3.3 Reasonably foreseeable misuse

CIAM group Spa declines all responsibility and the warranty is void in the event of negligence at the time of use of the machine or non-compliance by the operator with the user instructions.



Any use other than that specified in this manual is considered incorrect.

During use of the machine, other types of work and activities considered to be incorrect and which in general can pose risks to the safety of the workers and damage to the machine are not permitted.

Predictable incorrect uses are considered:

- Use of the machine for storage and display of products other than the food categories described.

- Incorrect use of the machine by personnel who have not been trained correctly.
- Use of the machine in a way that does not comply with the European provisions on occupational safety.
- Use of non-original and non-machine-specific spare parts.
- Use of the machine in a potentially explosive environment.
- Insufficient maintenance and periodic checks.
- Tampering with guards and safety systems.
- Structural changes or unauthorized changes to operation.
- Maintenance technicians failing to use the D.P.I.

In the event of abnormal behaviour of the machine, any type of intervention is the responsibility of maintenance operators.

3.4 General rules of safety and accident prevention

The instructions or warnings are not intended to replace the accident-prevention safety regulations, supplement them and to encourage their observance.

Dangers !

- Warnings alone do not eliminate danger!
- Failure to comply with the safety recommendations and improper use of the machine can result in an accident risk for you and for others!
- Before carrying out any operation that could constitute dangerous situations, check that near the machine there is a person who is able to provide first aid.
- Keep the workplace tidy and clean. Disorder in the workplace poses a risk.
- The floor must be dry and free from oil or grease stains.
- Avoid unstable positions. Make sure that you are in a safe and balanced position with respect to the machine.
- Any maintenance operation, whether ordinary or extraordinary, must take place when the machine is stationary and only when all the energy sources are switched off. Furthermore, no other form of stored energy must be present.
- The operator must check that no liquid containers are located near the electrical parts.
- Promptly intervene in conditions of danger within the scope of your skills and possibilities to eliminate and reduce the causes of risk.
- Electrical installation and connections from the machine to the respective disconnecting switch must only be carried out by a specialist installer.
- Strictly follow the instructions of the signs to avoid dangerous situations.
- This machine and its electrical equipment have been made to perfection; repairs must only be carried out by a specialist installer using original spare parts.
- Before each shift start, make sure that the safety devices work properly. Carry out simulation tests of the work cycle, verifying correct operation of all the safety devices present on the machine.
- Report any inefficiency of the safety devices or the means of protection immediately to the employer and to all those persons responsible for safety.
- The operator must ensure that the system is not used by unauthorised persons. The system must only be operated by personnel who have been instructed and trained and who:
  - are at least 16 years of age
  - possess the necessary technical knowledge.
  - give reason to believe that they are able to carry out their task reliably.
- Any person who is assigned to operating, manoeuvring, maintaining and/or repairing the machine must first read and understand the user and maintenance manual, in particular the “Safety” chapter. These instructions must be accessible at any time to the persons mentioned above. Any unusual occurrence regarding the system or part of it must be communicated immediately to the department head, to the shift supervisor or to other persons responsible

for safety of the machine; if necessary, stop the system using the dedicated ignition switch and the main switch.
- All safety warnings and indications applied to the system must be respected and followed.
- The use of accessories, tools and consumables other than those that are original or not recommended by the manufacturer may represent a risk of injury and exempt the manufacturer from civil and criminal liability.
- In the environment there must be no harmful or chemically aggressive vapours and/or explosive vapours and no dust or infiltration of dust that could be harmful to the operator or the machine.



Prohibitions !

- Changing the network frequency!
- Removing any type of safety device and/or protective barrier.
- Use of the machine with electric bridges and/or with mechanical means that exclude utilities/ parts of the machine itself.
- The leaving of tools or keys on top of the machine, or near it. After each maintenance operation, carefully check before turning the machine on that all tools, equipment and materials unrelated to the machine have been removed.
- Operating with the machine without guards. Once the maintenance operations have been completed, the mechanical repairer must necessarily reapply them.
- Applying power to the machine by tampering with the main switch and safety devices.
- Climbing up or getting on to the machine. It is forbidden to create walkways or precarious structures designed to cross over the machine.
- Prohibition for the designated operator and/or specialist personnel to alter the technical or physical characteristics of the equipment or to use it for purposes other than those envisaged and documented.
- Disconnecting of a live socket. Electrical equipment could be irreparably damaged.

The safety instructions given in this chapter are to be considered “general”. The more specific indications present in some of the chapters or paragraphs of this manual must be considered an integral part of this chapter.

3.4.1 Attentions for safe operation

- Avoid incorrect use of the power cord. Only cables or section extensions suitable for the power installed in the machine.
- Protect the cable from high temperatures, oil and sharp edges.
- Replace the cables where wear or damage occurs on them.
- Variations with respect to normal operation (increased power absorption, temperatures, vibrations, noises or signals from the safety and alarm system) alert to the fact that the operation is not correct. To prevent faults, which can directly or indirectly cause serious damage to persons or property, maintenance personnel must be promptly informed.
- Before starting any work, concentrate all your attention on what you are about to do. It is necessary to be extremely careful and to remain alert with promptness of reflexes: these are fundamental conditions for the operator. If the person suffers from any disorder or unfavourable physical condition, even minor, which could reduce their degree of vigilance, they must avoid putting the machine into operation or acting on aggregate or accessory equipment.
- Be very careful during the machine transportation stages of when handling of the annexed equipment! Refer to **“4.5 Handling the equipment”**on page 22 before carrying out any handling operation.
- When it issuspected that the system or part of it is no longer safe, turn it off and make sure it does not start inadvertently. Entrust the control and/or any repairs to specialist personnel trained on use of the machinery or, possibly, contact the manufacturer.

3.5 Safety devices applied on the machine

3.5.1 Fixed protections (fig 5)

The fixed type protections consist of fixed perimeter guards (screwed or welded), which have the function of preventing access to internal parts of the equipment (example Fig. 5 part.1-2).

It is absolutely forbidden to restart the machine, after maintenance, without correctly restoring the panels.

Periodically check the integrity of the fixed guards and the relative fastenings to the structure, with particular attention to the protection panels.

3.5.2 Electrical power sectioning (Fig. 6-7-8)

The equipment is not equipped with a disconnector on board that can simultaneously remove the voltage from the two poles (phase and neutral) of the power supply. In fact, pressing the **OFF** key on the electronic control unit (fig.6) only stops operation of the display cabinet, but does not remove current from the electrical components inside the display cabinet (lights, fans and electric base). Sectioning can be performed by means of a plug socket (fig.7), but it is highly recommended that the installer places on the electrical connection, upstream of the appliance, an omnipolar switch (fig.8) that ensures full disconnection of the display cabinet from the mains supply.

Pressing the OFF key on the electronic control unit stops the display operation but does not cause the electrical energy to be disconnected. Therefore, in the event of maintenance work, it is necessary to completely disconnect the display cabinet from the electrical mains by removing the power plug (fig.7) or by acting on the general switch installed upstream of the display cabinet (fig.8).

The isolating switch is not padlockable in the open circuit position. Therefore, in the event of maintenance operations in which the operator is not able to prevent accidental closing of the circuit by others, completely disconnect the appliance from the mains.

If this is not possible, display a sign warning not to switch on the power supply for the duration of the work and also display a sign in a visible position, with the wording **MACHINE UNDER MAINTENANCE** (fig.9)

Before restoring the power supply to the machine, make sure that the safety conditions have been re-established, remove any tools or instruments used and make sure that there are no persons in the work area. Follow the envisaged restart procedure.

3.6 Residual risks

During the project phase all the zones or parts at risk were assessed, and all the necessary precautions were taken to avoid risks to persons and damage to the Refrigerated Display Cabinets as indicated in the previous paragraphs.

Although the machine is equipped with safety systems, there are still a number of risks that cannot be eliminated but instead are reduced by corrective actions by the final integrator and by performing correct operating procedures.

Periodically check the operation of all the safety devices. Do not disassemble the fixed type protections of the machine.
Do not introduce foreign objects or tools into the operation and work area of the equipment.

The following is a summary of the risks that remain in the machine during the phases of:
- Normal operation
- Adjustment and fine-tuning
- Maintenance
- Cleaning.

3.6.1 Electrocution

- Risk of breakage or damage, with a possible lowering of the level of safety, of the components of the electrical equipment following a short circuit.
- Before switching on the power supply, make sure that there is no maintenance work in progress.

BEFORE MAKING THE CONNECTION, check that the c.c. current at the installation point it does not exceed the one indicated on the protection switches in the electrical panel, otherwise the user is obliged to provide the appropriate limitation devices

It is strictly forbidden to carry out any type of electric modification to avoid creating additional hazards and consequent risks that are not foreseen.

3.6.2 Fire

In the event of a fire, always immediately switch off the main switch of the main power supply line (fig.8).

3.6.3 Explosive atmosphere

The machine is not suitable for work in environments classified as ATEX risk.

It is forbidden to use the same in a classified atmosphere at risk of fire or explosion or partially such.

3.6.4 Pressurised gas

The machine is equipped with a pressurised gas refrigeration system. The piping and part of the cooling system containing the pressurised gas is to be considered at risk of explosion.

Pay the utmost attention to avoid damaging the pipes containing the gas. During maintenance work on the system, make sure that the pressure has been discharged.

3.6.5 Sliding 

The leaking of lubricants or food products in areas surrounding the machine can cause personnel to slip.



Check that there are no leaks and always keep these areas clean.

3.6.6 Stumbling 

The disorderly depositing of material in general can constitute a tripping hazard and partial or total limitation of escape routes if required.
Ensure operational, transit and escape routes free from obstacles and comply with the applicable regulations.

3.6.7 Cutting 

Handling of the glass panels and glass shelves during installation, maintenance, cleaning and in any case also during daily use of the display cabinet, entails the risk of cutting in case of glass breakage.



Pay the utmost care to avoid damaging or breaking the glass. Use protective gloves when handling them.

3.6.8 Circuit faults

Due to possible failures, the safety circuits may lose some of their effectiveness with relative lowering of the safety level.



Perform periodic checks of the operating status of the safety devices present in the machine.

3.6.9 Gas leaks 

If refrigerant gas leaks occur during installation, use or maintenance of the display cabinet, immediately ventilate the room.



If the refrigerant gas comes into contact with the fire, toxic gases may be generated.

3.6.10 Low temperatures (cold)

During normal operation, various “cold” devices are present in the machine.
The refrigerant gas pipes, the heat exchanger inside the display cabinet, etc., these parts of the machine if in prolonged contact with parts of the body can cause incidents of freezing or “cold burns”.

Always use protective gloves when working on these parts of the machine.

3.6.11 High temperatures (hot)

The display cabinet can be fitted with heating accessories:
- Water bath (maximum operating temperature 90°C)
- Hot plate (maximum operating temperature 65°C)
- Evaporator (maximum operating temperature 35°C)

These accessories heat up during operation and can therefore cause burns if in contact with parts of the body.

Always use protective gloves when working on these parts of the machine.

3.7 Safety plates applied to the machine

Based on the residual risks of various types, identified for the machine, **CIAM group Spa** has equipped the Refrigerated Display Cabinets with danger, warning and obligation sings, defined according to the European regulations on graphic symbols to be used on systems (Directive 92/58/EEC).
The plates in question are in a clearly visible position as shown in figure (10).

It is absolutely forbidden to remove the warning signs on the machine.
CIAM group Spa declines any responsibility for the safety of the Refrigerated Display Cabinets in the event of non-compliance with this prohibition and for any accidents or damage to persons, property or animals due to the absence of safety labels on the machine.

In the event that the plates deteriorate or in general are not particularly visible or are absent, replacement is mandatory, requesting them directly from **CIAM group Spa**.

INGOMBRI APPARECCHIATURE		/	EQUIPMENT DIMENSIONS	
Le quote evidenziate nel prossimo paragrafo rappresentano rispettivamente:			The quotes highlighted in the next two paragraphs respectively represent:	
Hp	altezza spazio refrigerato		Hp	refrigerated space height
Hs	altezza vassoi espositivi		Hs	display trays height
Ht	altezza totale		Ht	total height
P	profondità vetrina		P	showcase depth
L	lunghezza vetrina		L	showcase length

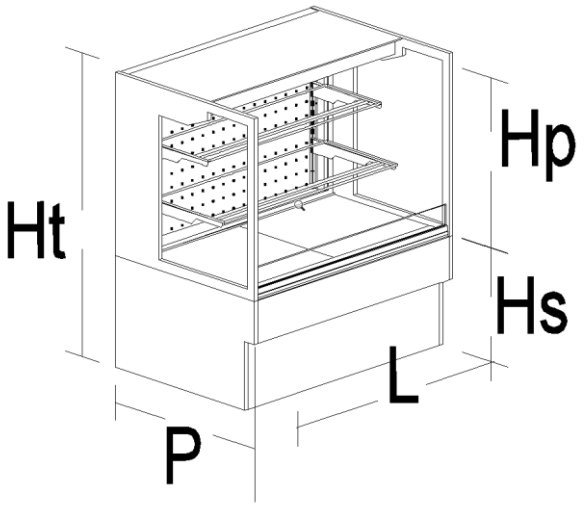

MODELLO MODEL	P	L	Hp	Hs	Ht
	mm	mm	mm	mm	mm
G&Go120	865	1200	780	535	1315
G&GoD120	843	1200	759	556	1315

LIMITI DI CARICO / LOAD LIMITS

Per il rifornimento della vetrina è necessario osservare le seguenti regole:

- Disporre il prodotto uniformemente, evitando zone vuote
- Distanziare il prodotto l'uno dall'altro per favorire la corretta circolazione dell'aria.
- Disporre il prodotto in modo da non superare il limite di carico previsto.
- Non caricare con eccessivo peso le mensole della vetrina. Vedi tabella sotto.
- Evitare di coprire con il prodotto eventuali griglie di mandata e/o aspirazione.

La parte evidenziata con tratto scuro rappresenta la zona entro cui deve essere posto il prodotto refrigerato.

È fondamentale non superare il limite previsto al fine di non alterare la circolazione corretta di aria ed evitare così una temperatura del prodotto più elevata ed un possibile rischio di formazione di blocchi di ghiaccio sull'evaporatore.

The following rules must be observed when filling the display case:

- Arrange the product evenly, avoiding empty areas.
- Keep the product at a distance from each other to ensure proper air circulation.
- Arrange the product so that it does not exceed the expected load limit. See table.
- Do not overweight the shelves of the window.
- Avoid covering with the product any grids of delivery and/or suction.

The part highlighted with dark line represents the area in which the refrigerated product is to be placed.

It is essential not to exceed the limit provided in order not to alter the correct circulation of air and thus avoid a higher temperature of the product and a possible risk of ice blocks forming on the evaporator.

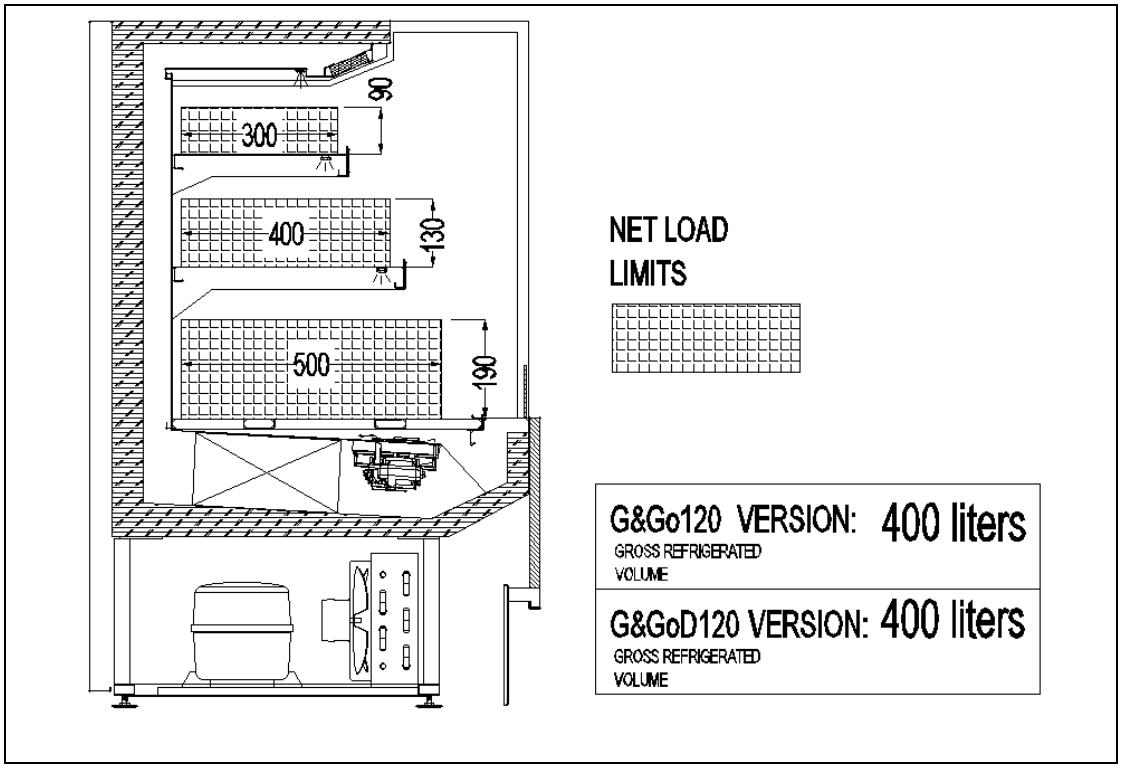

CARICO MASSIMO CONSENTITO UNIFORMEMENTE DISTRIBUITO
MAXIMUM LOAD ALLOWED UNIFORMLY DISTRIBUTED - (Kg)

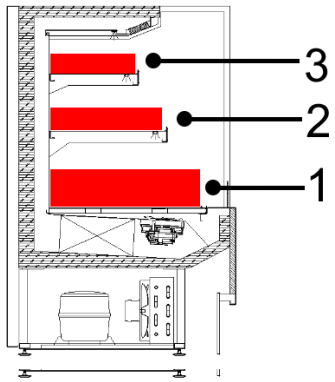

Lunghezza Length cm	1 Piano inferiore Lower floor	2 Mensola Shelf	3 Mensola Shelf	4 Mensola Shelf	5 Mensola Shelf	6 Mensola Shelf
G&Go120	30	25	25	25	25	25
G&GoD120	36	30	30	30	30	30

ETICHETTA CE /CE DATA PLATE

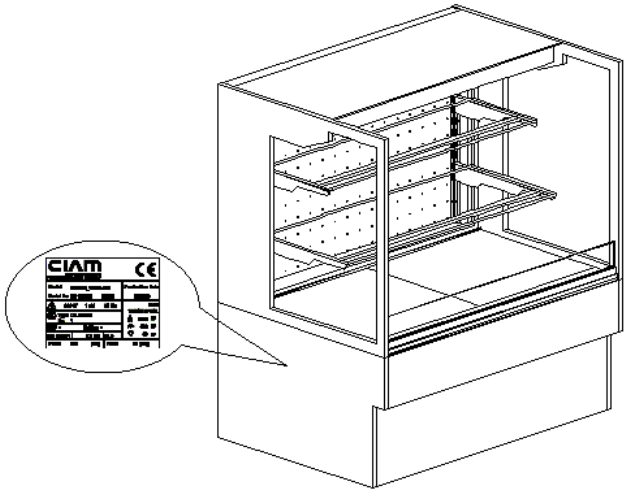

DATA PLATE CONTENT

CIAM
REFRIGERATION DESIGN
PETRIGNANO DI ASSISI (PG) ITALY
CE

Model 1			Production Date 4
Serial No. 2		3	
5 V/ 6 ph/ 7 Hz			17 MAX 18 W/A
Type 8 No. 9			19 W
GWP = 10	CO2eq = 11		20 W
Gas 12	13 Kg	Cl. 14	21 W
Pmax 15 psig		Pmin 16 psig	

1. Nome commerciale / Commercial name of the unit
2. Numero seriale/ Identification serial number
3. Numero di ordine/ Order number
4. Data di produzione / Production date
5. Tensione / Voltage
6. Fasi / Phases
7. Frequenza / Frequency
8. Tipo compressore / Compressor type
9. Numero di compressori / Number of compressors
10. Global Working Potential
11. Tons of CO_2 equivalent
12. Tipo refrigerante / Refrigerant type
13. Peso refrigerante / Refrigerant weight
14. Classe climatica / Climatic rate
    (Cl.3 = +25°C/60% U.R.; Cl. 4 = +30°C/55% U.R.)
15. Alta pressione di test / Test pressure – system high pressure side
16. Bassa pressione di test / Test pressure – system low pressure side
17. Massima tensione nominale/Max voltage rating
18. Massima corrente nominale /Max nominal current
19. Massima potenza in defrost / Max. power absorbed during defrost
20. Potenza assorbita dai riscaldatori / Nominal power absorbed by heating elements
21. Potenza illuminazione / Lighting nominal power

COMANDI RAPIDI / QUICK COMMANDS

ACCENSIONE POWER ON

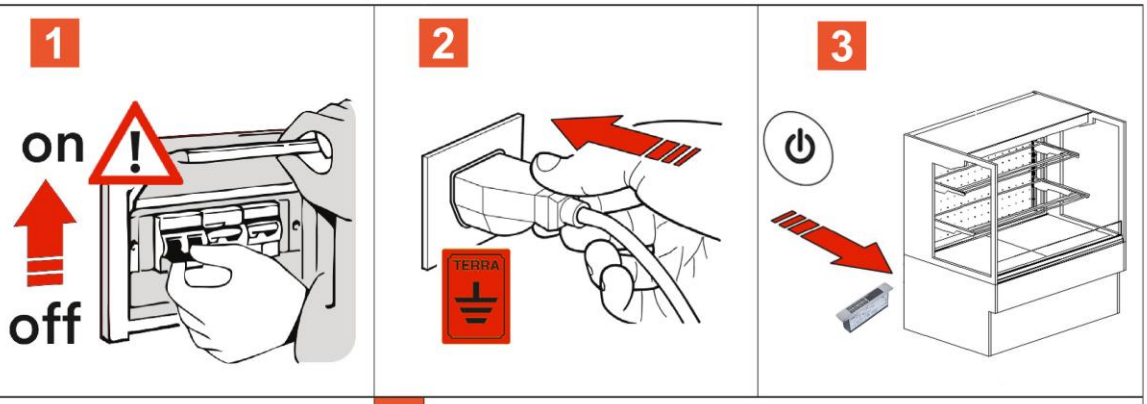

REGOLAZIONE ADJUSTMENT



1	Se premuto aumenta il valore visualizzato sul display. When pressed increases the value shown on the display.
2	Se premuto diminuisce il valore visualizzato sul display. When pressed decreases the value shown on the display.
3	Se premuto avvia il ciclo manuale di sbrinamento. When pressed starts the manual defrost cycle.
4	Se premuto memorizza il valore impostato. When pressed stores the set value.
5	Se premuto accende le luci di illuminazione della vetrina. When pressed turns on the lights illuminating the display case.
6	Se premuto avvia il funzionamento della vetrina. When pressed starts operation of the showcase.

SPEGNIMENTO POWER OFF

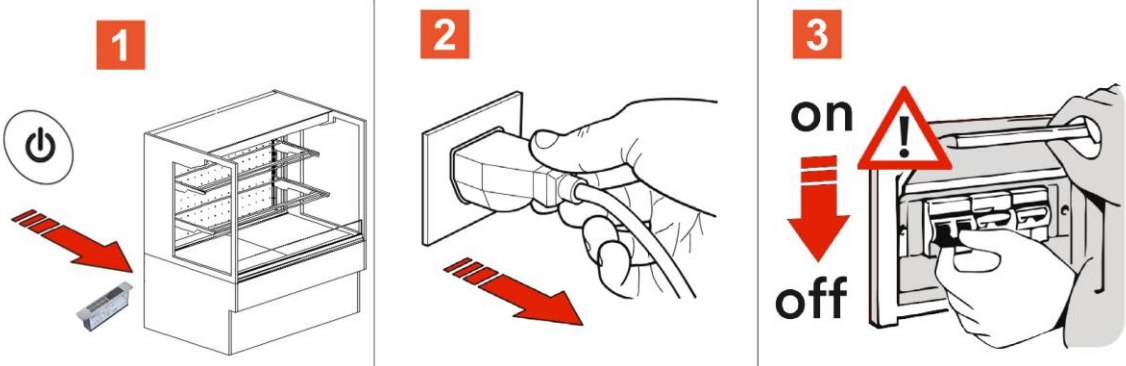

PULIZIA E MANUTENZIONE /CLEANING AND MAINTENANCE

1 – BEFORE PROCEEDING....



ATTENTION BEFORE ANY MAINTENANCE WORK DISCONNECT THE EQUIPMENT FROM THE ELECTRICITY NETWORK.

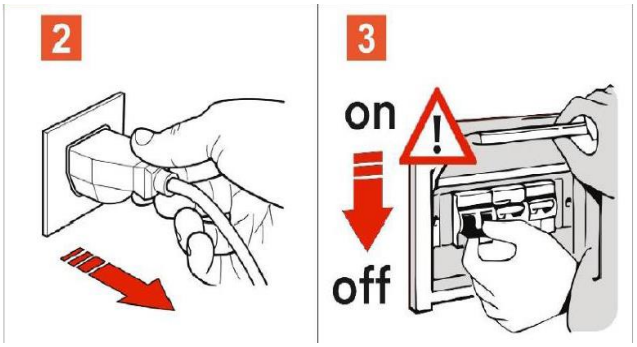

2 – GENERAL CLEANING

OPERAZIONE DI PULIZIA - CLEANING OPERATION		PREQUENZA - FREQUENCY
PULIZIA SUPERFICI IN ACCIAIO INOX CLEANING IN STAINLESS STEEL SURFACES		Settimanale - Weekly
PULIZIA SUPERFICI IN MATERIALE PLASTICO CLEANING SURFACES IN PLASTIC MATERIALS		Settimanale - Weekly
PULIZIA SUPERFICI IN VETRO CLEANING GLASS SURFACES		Giornaliero - Daily
PULIZIA SUPERFICI IN LEGNO CLEANING WOODEN SURFACES		Settimanale - Weekly
SBRINAMENTO TOTALE TOTAL DEFROSTING		Massimo ogni 15 giorni Maximum every 15 days





3 – CONDENSER CLEANING



BEFORE PERFORMING THIS OPERATION, DISCONNECT THE EQUIPMENT FROM THE ELECTRICITY NETWORK.



THIS OPERATION MUST BE CARRIED OUT BY QUALIFIED PERSONNEL AND WITH APPROPRIATE PROTECTIONS AND APPROPRIATE TOOLS.

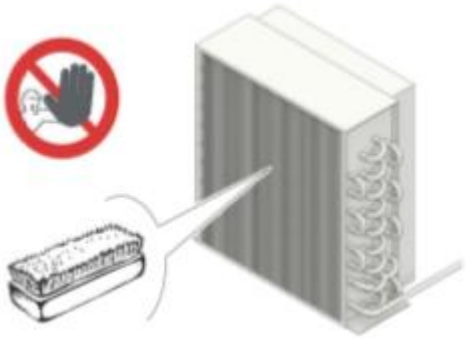

THE CLEANING OF THE CONDENSER MUST BE MADE ON A MONTHLY BASIS.

WARNING

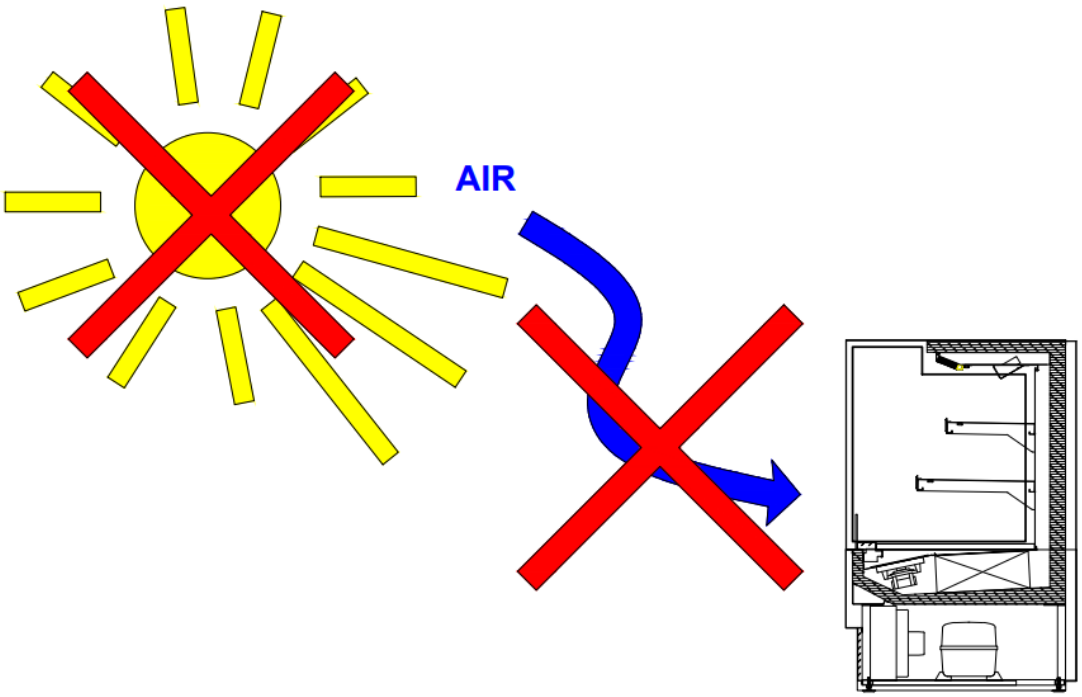

NO ESPOSIZIONE A RAGGI SOLARI DIRETTI
NO EXPOSURE TO DIRECT SUNLIGHT

NO FLUSSI DI ARIA ESTERNA
NO EXTERNAL AIR FLOWS

CLIENTE	COMMESSA	OGGETTO	DESIGNER Giovanni Ziarelli	DATA	TAV. 1	REV. A	SCALA

CIAM REFRIGERATION DESIGN

22AC.G&G

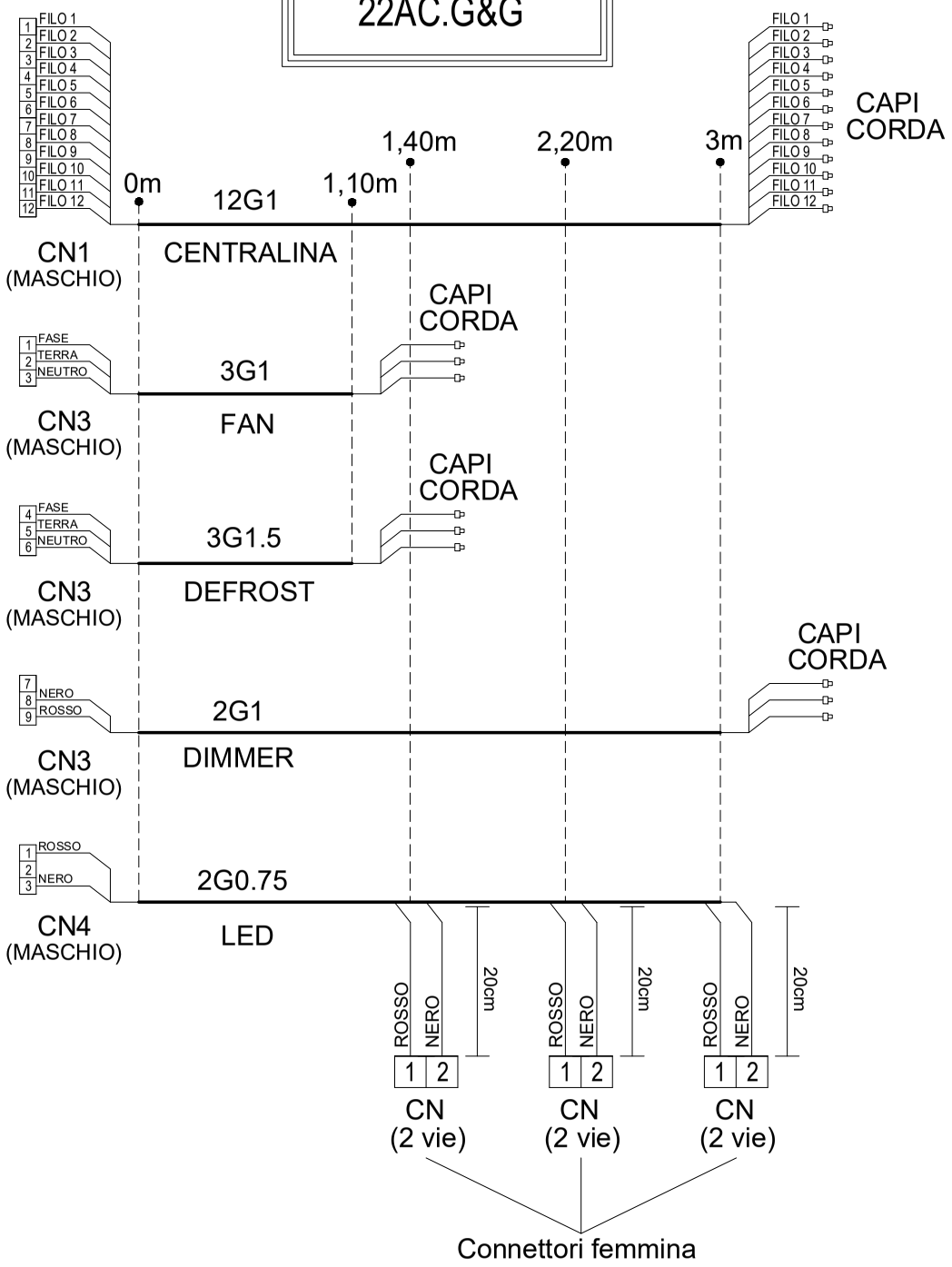

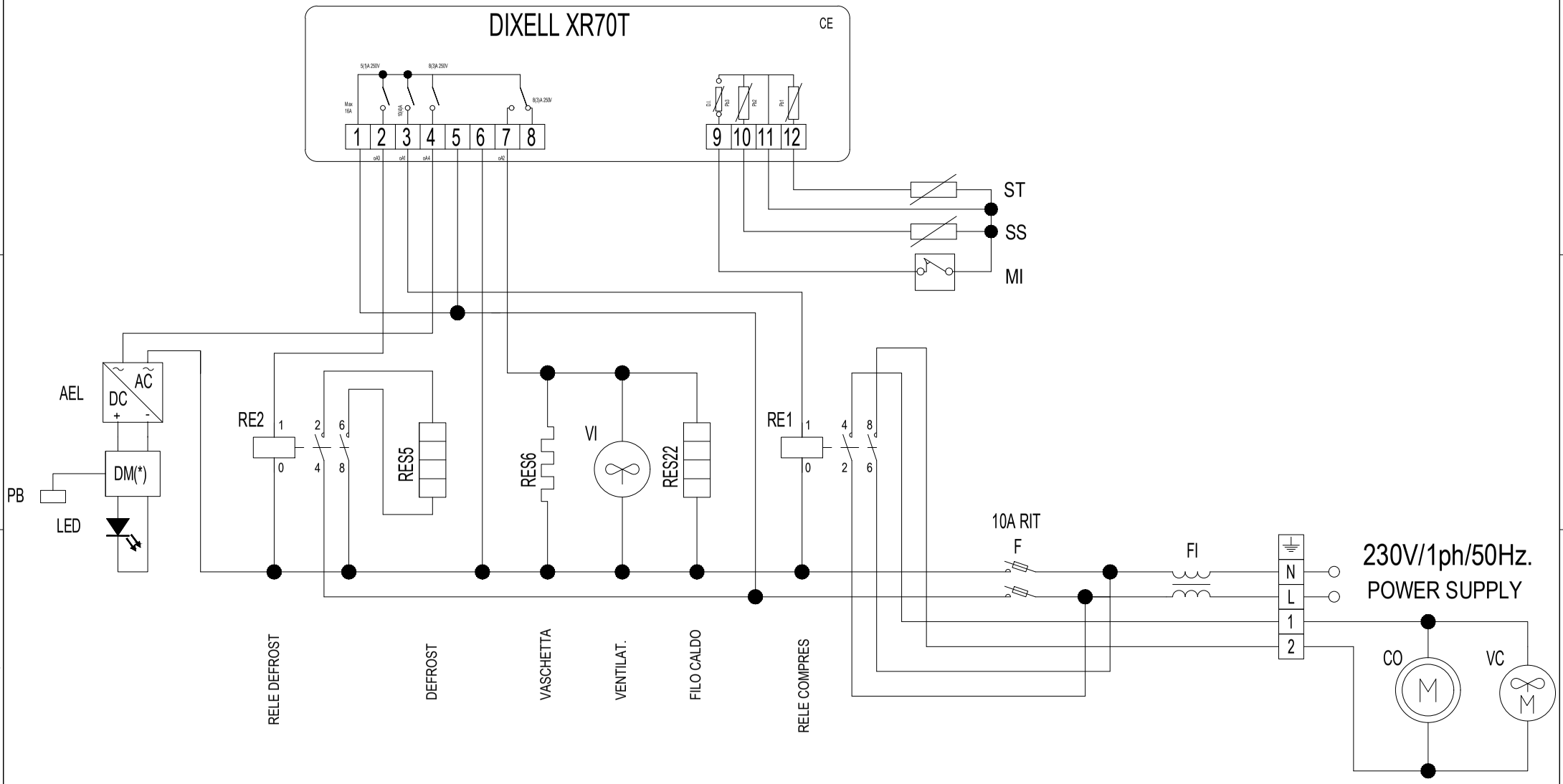

Rugosità - Ra	QUOTE SENZA INDICAZIONE DI TOLLERANZA - Grado di precisione medio UNI 5307												TRATT. SUPERFICIALE	Via dei Pini n°9 06081 Petrignano d'Assisi PG ITALY T +39 075 80161 F +39 075 8016217	CIAM REFRIGERATION DESIGN
3,2	0÷6 ±0,06	6÷30 ±0,1	30÷120 ±0,15	120÷315 ±0,2	315÷1000 ±0,3	1000÷ 2000 ±0,5	3÷6 ±1°	6÷30 e 30'	30÷120 e 20'	oltre 120 e 10'	Smussi e Raggi 0,3÷0,8			

Certified Quality System ISO 9001:2008

REV.	DATA	DESCRIZIONE	VERIFICA	APPROVAZIONE
01	..	..		
02	..	..		
03	..	..		

DENOMINAZIONE **22BS.MUR_TN.70**

DESIGNER Ziarelli Giovanni

DATA 09/02/2021

P / N ..

Togliere Bavature

SCALA 1:20

FILE NAME ..

FOGLIO 01

MATERIALE ..

Q.tà ..

FINITURA ..

Peso (Kg) ..

www.ciamweb.it info@ciamgroup.it

A termini di legge ci riserviamo la proprietà di questo disegno con divieto di riprodurlo o renderlo noto a terzi senza nostra approvazione

Tolleranze generali vedi tabella

CLIENTE	COMMESSA ..	OGGETTO ..	DESIGNER Giovanni Ziarelli	DATA ..	TAV. 1	REV. A	SCALA

CIAM REFRIGERATION DESIGN

22BS.MUR_TN.70

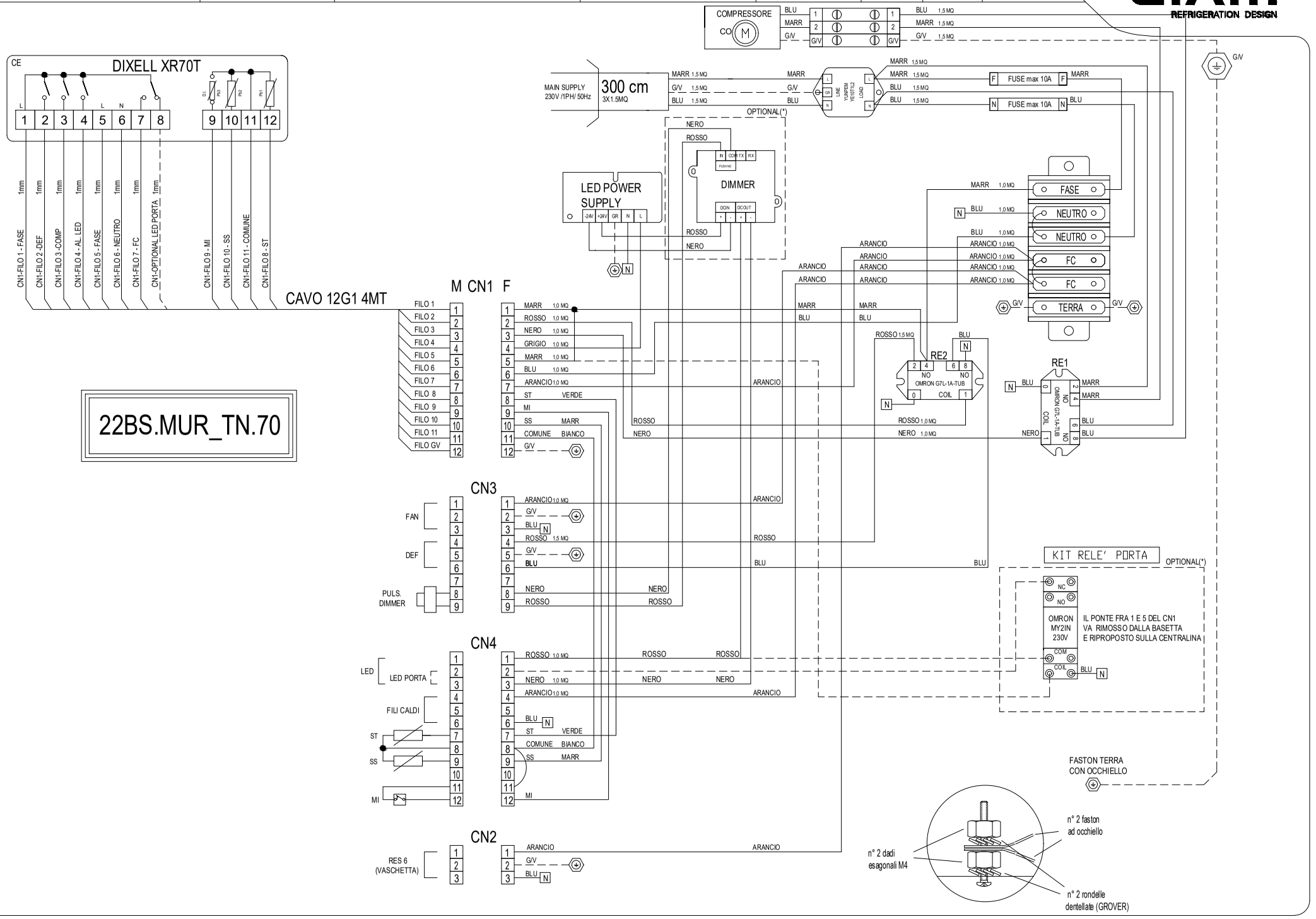

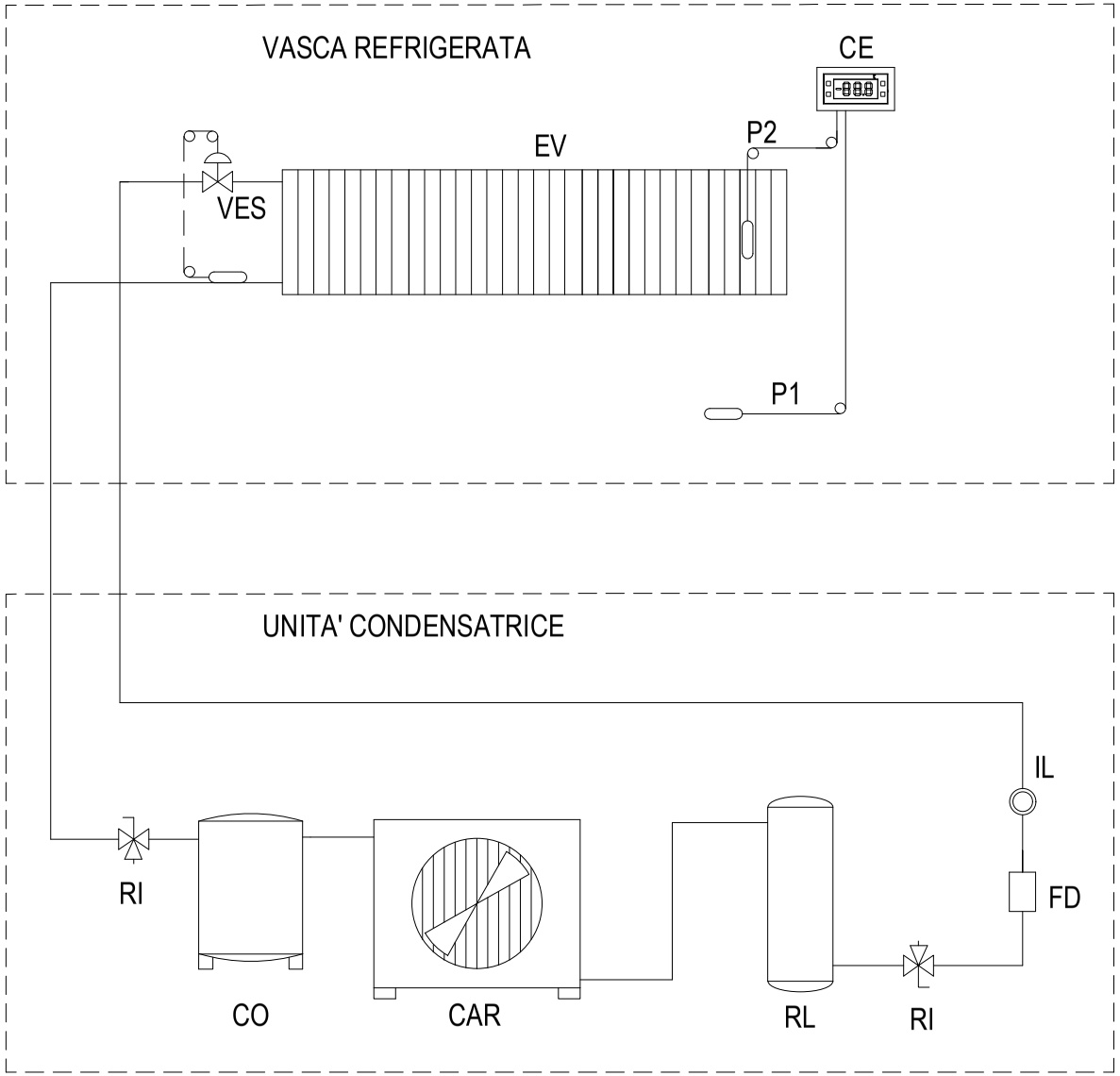

CE Centralina elettronica

CAR Condensatore

CO Compressore

EV Evaporatore

FD Filtro

IL Spia di liquido

P1 Sonda ambiente

P2 Sonda sbrinamento

RI Rubinetto

RL Ricevitore

VES Valvola di espansione

Certified Quality System ISO 9001:2008

Rugosità - Ra 3,2

QUOTE SENZA INDICAZIONE DI TOLLERANZA - Grado di precisione medio UNI 5307

0÷6	6÷30	30÷120	120÷315	315÷1000	1000÷ 2000	3÷6	6÷30	30÷120	oltre 120	Smussi e Raggi
±0,06	±0,1	±0,15	±0,2	±0,3	±0,5	±1°	e 30'	e 20'	e 10'	0,3÷0,8

TRATT. SUPERFICIALE

Via dei Pini n°9
06081 Petrignano d'Assisi PG ITALY
T +39 075 80161 F +39 075 8016217

CIAM REFRIGERATION DESIGN

www.ciamweb.it info@ciamgroup.it

REV.	DATA	DESCRIZIONE	VERIFICA	APPROVAZIONE
01	2020	Emissione		
02	..	..		
03	..	..		

DENOMINAZIONE **Vetrina refrigerata temp. positiva**
Schema frigorifero positiva unità interna a valvola

Togliere Bavature

SCALA 1:20

DESIGNER Pascolini

DATA 2020

P / N **SIF-RV-V**

FILE NAME SIF-RV-V_impianto a valvola

FOGLIO 01

MATERIALE ..

Q.tà ..

FINITURA ..

Peso (Kg) ..

A termini di legge ci riserviamo la proprietà di questo disegno con divieto di riprodurlo o renderlo noto a terzi senza nostra approvazione

Tolleranze generali vedi tabella

FULL TOUCH - XR70T

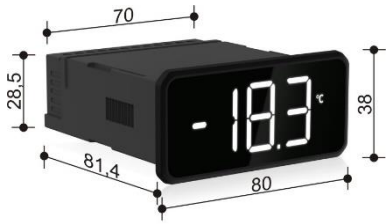

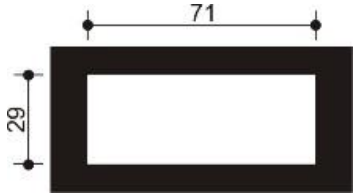

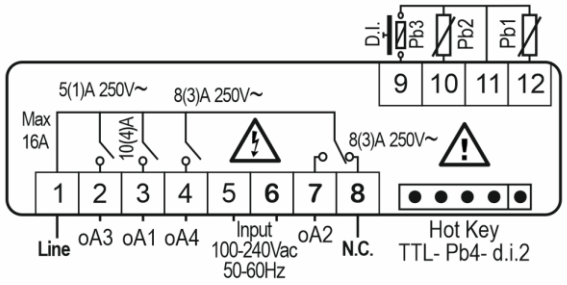



Please put this label near the controller in order to keep all information you need at your fingertips!

CONTACT: dixell.service@emerson.com

SAFETY INFO

- This manual is part of the product and should be kept near the instrument for easy and quick reference.
- The instrument shall not be used for purposes different from those described hereunder. It cannot be used as a safety device.
- Dixell Srl reserves the right to change the composition of its products, even without notice, ensuring the same and unchanged functionality.
- In case of failure or faulty operation, contact the local distributor or "Dixell S.r.l." with a detailed description of the fault.
- The instrument must not be opened.
- Check the application limits and the correct power supply voltage before proceeding.
- Do not expose to water or moisture: use the controller only within the operating limits avoiding sudden temperature changes with high atmospheric humidity to avoid condensation
- Warning: disconnect the power supply and all other electrical connections before any kind of maintenance.
- Observe the maximum current value which can be applied to each relay (see Technical Data).
- Ensure that the wires for probes, loads and the power supply are separated and far enough from each other, without crossing or intertwining.

USER INTERFACE

SCREEN	APPEARANCE	SCREEN	APPEARANCE
Home		Info	
Virtual Keyboard		Programming Mode	
Parameter Menu		Set Point Menu	

SCREEN NAME	DESCRIPTION
Home	This screen shows temperature value, measurement unit and active alarms only. This is the first screen after power on or after exit from other status.
Virtual Keyboard	This screen shows available functions. Activated function will blink when this screen is visualized.
Info	This screen shows activated functions and regulation outputs (compressor, ventilators)
Programming Mode	This screen enables the modification of the Set point or parameters.
Parameter Menu	These screens enable the modification of all parameter values.
Set Point Menu	This screen enables the modification of the Set Point value.

USER INTERACTION

HOME NAVIGATION	PROG MENU ACTIVATION	SET POINT MODIFICATION	PROG MENU NAVIGATION
			
 H-SWIPE	 TAP and HOLD	 TAP and HOLD on SET	 TAP and HOLD on PRG
			
 H-SWIPE			
			

GESTURE	HOW-TO	DESCRIPTION
ONE TAP	Press a specific area of the screen with a finger for 1 sec	**Switch ON / Switch OFF:** when in Virtual Keyboard, use this to turn on/off a specific function. When in Programming mode, use this to select a parameter or a parameter value.
TAP and HOLD	Press any place of the screen with a finger for 3 sec	**Enter / Save:** use this to enter Programming mode or Parameter menu and to save modifications. When in Virtual Keyboard, use this on the "ONOFF" to switch OFF and ON the device.
H-SWIPE	Drag a finger across the screen, from left to right or from right to left	**Browse:** use horizontal swipe (right to left or left to right) to browse through HOME, Virtual Keyboard and Info View. When in programming mode: use horizontal swipe to browse through parameter menu.
V-SWIPE	Drag a finger across the screen, from top to bottom or from bottom to top (overlapping only one of the digits)	**Modify:** use vertical swipe (from top to bottom or bottom to top) to change a parameter value.

PROGRAMMING MENU

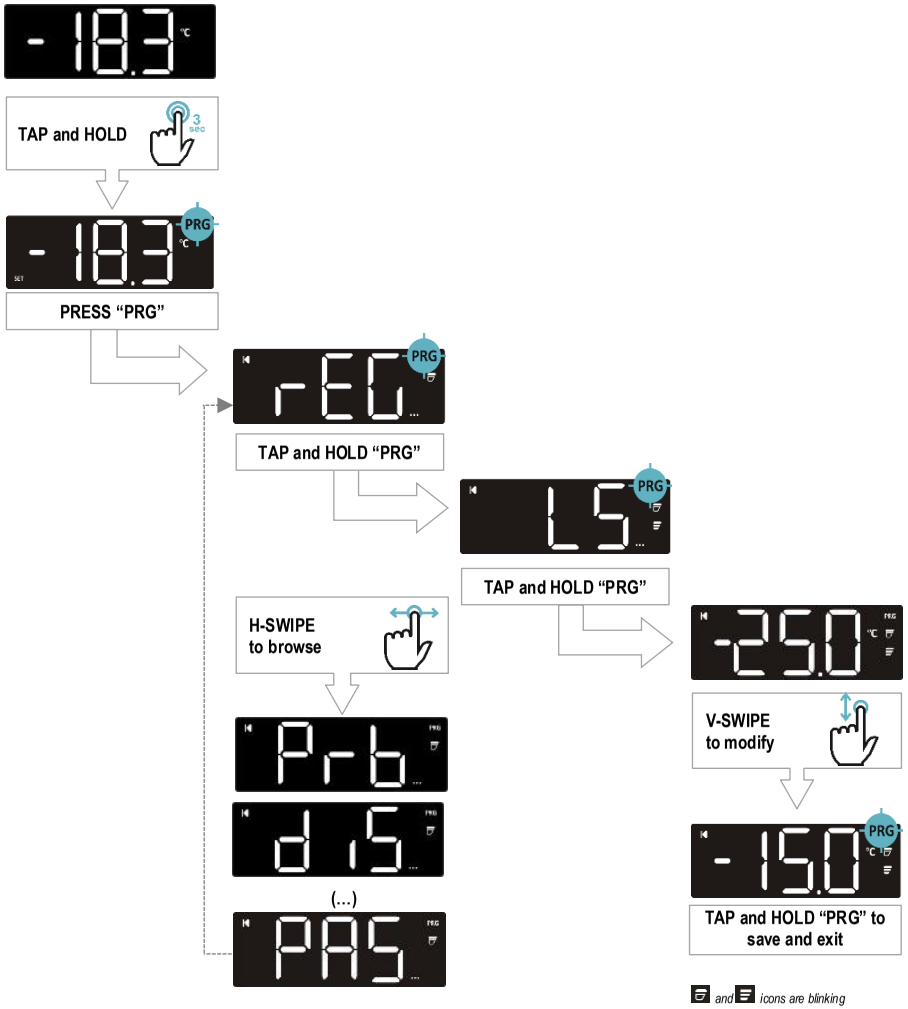

TECHNICAL SPECIFICATIONS

FEATURES	DESCRIPTION
Housing	Self-extinguishing PC
Dimensions	Front fascia 38x80 mm; case depth 81mm
Mounting	Panel mounting, 71x29mm panel cut-out
Protection	Body: IP20; Front: IP66
Power Supply	230Vac ±10%, 50/60Hz; 110Vac ±10%, 50/60Hz; 100 to 240VAC±10%, 50/60Hz; 12VAC ±10% Overvoltage category II
Rated Power	12VAC: 3VA; 110VAC: 4VA; 230VAC: 4VA; 100-240VAC: 3VA
Display	White display, LED type, 3 digits with decimal point and multi-function icons
Terminal blocks	Plug-in or screw terminal block, wire section between 0,5 and 2,5 mm2 Max tightening force: 0.3 N/m for 3,5mm pitch, 0.4 N/m for 5,0mm pitch
Environment	Pollution degree 2, non-condensing humidity
Operating Conditions	IEC: 0T60°C; 20-85 rH% (non-condensing humidity) UL: -20T60°C; 20-85 rH% (non-condensing humidity)
Storage Conditions	-25T60°C; 20-85 rH% (non-condensing humidity)
Resistance to Heat and Fire	UL-V0
Measurement range	NTC: -40T110°C; resolution 0.1°C or 1°C (selectable) PT1000: -100T150°C; resolution 0.1°C or 1°C (selectable) PTC: -50T150°C; resolution 0.1°C or 1°C (selectable)
Accuracy	±1% compared to the full scale
Inputs	Up to 4 NTC, PTC or PT1000 (configurable) Up to 2 voltage free contacts
Relay Outputs	Nominal / UL / IEC oA1: SPST 16A, 250VAC / 10FLA, 60LRA, 30k cycles Pilot Duty B300, 6k cycles / 10(4)A, 250 Vac, 50-60 Hz, 100K cycles oA2: SPDT 8A, 250VAC / ½ hp, 240 Vac, 30k cycles Pilot Duty B300, 30k cycles / 8(3)A, 230 Vac, 50-60 Hz, 50K cycles oA3: SPST 8A, 250VAC / ½ hp, 240 Vac, 30k cycles Pilot Duty B300, 30k cycles / 8(3)A, 230 Vac, 50-60 Hz, 50K cycles oA4: SPST 5A, 250VAC / 1.9FLA, 11.4LRA, 30k cycles Pilot Duty B300, 30k cycles / 5(1)A, 250 Vac, 50-60 Hz, 50K cycles Action type 1B
Real Time Clock	Data maintenance up to 6 months with lithium battery
HOT KEY port	MAX voltage allowed is 5 VDC. DO NOT CONNECT ANY EXTERNAL POWER SUPPLY
Approvals	R290/R600a: relays tested according to IEC EN60079:0 and IEC EN60079:15 IEC60730-2-9: 2008 (Third Edition) and Am.1:2011 in conjunction with IEC 60730-1:2010 (Fourth Edition) UL 60730-1, 5th edition, dated August 03, 2016 UL 60730-2-9, 4th edition, dated February 14, 2017 CAN/CSA-E60730-1, 5th edition, dated November 01, 2017 CAN/CSA-E60730-2-9:15 3rd edition, dated September, 2015

DIXELL EMERSON
Dixell S.r.l. - Z.I. Via dell'Industria, 27 - 32016 Alpago (BL) ITALY
Tel. +39.0437.9833 r.a. - Fax +39.0437.989313 - EmersonClimate.com/Dixell - dixell@emerson.com