Murale Refrigerato

Refrigerated Wall Compact

SBUX_TBOY100I
SBUX_TBOY120I



Scheda tecnica e comandi rapidi
Data sheet and quick commands

CIAM s.p.A.
06081 Petrignano d'Assisi
PG – Italy
tel. 075 80161
Fax 075 8016215
http://www.ciamgroup.it
e-mail: info@ciamgroup.it

REFRIGERATION DESIGN

ISO 9001

Ver _ 17.06.2021

SUMMARIO / SUMMARY

INFORMAZIONI GENERALI / GENERAL INFORMATION	1
SCHEDA TECNICA / DATA SHEET	7
SICUREZZA / SAFETY	8
INGOMBRI APPARECCHIATURE / EQUIPMENT DIMENSIONS	15
LIMITI DI CARICO / LOAD LIMITS	16
ETICHETTA CE / CE DATA PLATE	17
COMANDI RAPIDI / QUICK COMMANDS	18
PULIZIA E MANUTENZIONE / CLEANING AND MAINTENANCE	19
SCHEMA ELETTRICO /ELECTRICAL DRAWING	21
SCHEMA FRIGO / COOLING DIAGRAM	24
VENTILAZIONE UNITA' CONDENSATRICE / CONDENSING UNIT VENTILATION	25
RICAMBI / SPARE PARTS	26
ISTRUZIONI CENTRALINA / INSTALLING AND OPERATING INSTRUCTIONS	36

1 - GENERAL INFORMATION

1.1 General information on the manual and its use



This manual must be read very carefully before transporting, installing, or using a CIAM group Spa appliance.

This documentation is prepared in compliance with the provisions of Directive 2006/42/EC.
This manual indicates the intended use of the refrigerated display cabinet and provides instructions for transportation, installation, assembly and use of the same.
The contents of this manual are strictly technical in nature and are the property of **CIAM group Spa**. It is therefore forbidden to reproduce, disclose or modify partially or completely its contents without written authorisation.
The owner company protects its rights according to the law.

1.2 Symbols used in the manual to facilitate reading



WARNING - NOTE! Read the following instructions carefully.
It indicates a warning or note about key features or useful information.
Pay attention to the text blocks indicated by this symbol



GENERIC DANGER - ATTENTION! Danger sign
Text marked with this symbol indicates that failure to follow the instructions provided may result in damage to refrigerated cabinet equipment and physical injury or death.



VOLTAGE EQUIPMENT - ATTENTION! Danger sign
The text marked with this symbol indicates that the operation to be described involves the risk of electric shock and therefore of electrocution.



DANGER OF BURNS - ATTENTION! Danger sign
The text marked with this symbol indicates that the operation to be described involves the risk of scalds and burns.



CUTTING DANGER - ATTENTION! Danger sign
The text marked with this symbol indicates that the operation to be described involves the risk of cutting.



PROHIBITED! - ATTENTION! Prohibition sign
It reports operations that must never be performed



PROHIBITED! - ATTENTION! Prohibition sign
It is forbidden to remove the safety and protection devices.



REMOVE VOLTAGE! - ATTENTION! Obligation sign
Before any intervention on the refrigerated display cabinet it is mandatory to turn off the power supply of the same.



WEAR PERSONAL PROTECTION CLOTHING! ATTENTION! Obligation sign
Before each intervention on the refrigerated display cabinet, it is essential to wear the PPE (personal protective equipment) highlighted by the mandatory signal.



VISUAL OBSERVATION
It indicates to the reader that they must perform a visual inspection. This symbol is also found in the operating instructions. The user is required to read a measurement value, to check a signal, etc.



HEARING OBSERVATION
It indicates to the reader that they must perform an auditory observation. This symbol is also found in the operating instructions. The user is required to listen for an operating noise.



SPECIAL TOOL
It indicates that it is operationally necessary to use a tool or special equipment.



AVOID DAMAGING THE MATERIAL
Indication of a high risk of damage to a part, for example using a incorrect tool or performing an assembly following an incorrect procedure.



AUTHORISED TECHNICIAN. Text marked with this symbol indicates that the operation to be described must be performed by an operator with particular tasks and qualifications. Paragraph 1.7 contains a detailed explanation of the qualifications.

1.3 Warnings for the purchaser

The manual, similarly to the EC certificate of conformity, is an integral part of the refrigerated display cabinet and must always accompany it in every movement or resale. The user must keep this documentation intact, to allow consultation, throughout its life span.
It must be carefully stored in a place known to the responsible persons, to the persons designated to transportation, installation, use, maintenance, repair, final disposal, etc.



This manual is to be considered an integral part of the refrigerated display cabinet and must be kept until final demolition of the same. In case of loss or destruction it is possible to request a copy from CIAM group Spa specifying exactly the model, serial number and year of production.

Make sure that all users have thoroughly learned the rules of use and the meaning of the symbols shown on the refrigerated display cabinet.
Possible accidents can be avoided by following these technical instructions compiled with reference to the **relevant EEC directives** . In any case, always comply with the national safety regulations.

The manuals enclosed with this manual of the **CIAM group Spa** company are the exclusive property of the respective manufacturers and are therefore subject to the rules imposed by the same manufacturers. They are in any case protected by copyright.



The annexed manuals, referred to in the CIAM group Spa manual, must be carefully read ensuring familiarity with their contents, as they are an integral part of the regulations government safety and correct use of the CIAM group Spa equipment.

The manual reflects the manufacturing technology at the time of supply.The manufacturer reserves the right to modify its products in any way it deems necessary, with no obligation to update manuals and machines relating to previous manufacturing batches.

The manufacturer declines any responsibility for production anomalies and/or for damage caused by the machine to property, persons and animals in the following cases:

- Improper use of the system or use by unsuitable or authorised personnel.
- Power defects
- Insufficient or poor periodic maintenance
- Modifications or interventions not agreed upon and not authorised by the manufacturer
- Use of spare parts that are not original or not specific to the model
- Full or partial failure to comply with these instructions

Responsibility for application of the safety prescriptions listed below is the responsibility of the technical personnel designated to the activities envisaged on the machine, who must make sure that the authorised personnel are qualified to perform the required activity:

- Ensure familiarity with and strictly follow the instructions contained in this document
- Ensure familiarity with and apply the general safety regulations applicable to the machine.
- Failure to comply with the safety regulations can result in injury to personnel and damage to components
- The control unit of the machine.
- Reading, although exhaustive, of this manual cannot under any circumstances replace the adequate experience of the operators.
- The user can, at any time, contact the retailer to request further information in addition to that contained in this document, as well as to indicate improvement proposals.

CIAM group Spa declines all responsibility due to negligence and failure to comply with these instructions.

Use only and exclusively original spare parts. **CIAM group Spa** is not responsible for any damage caused by the use of non-original spare parts.

CIAM group Spa is only responsible for the instructions provided in the original ITALIAN language: it can be problematic to fully verify any translations.

This is why your assistance is invaluable !!

The language translations of technical manuals are very important and are essential for correct use of the machines. **CIAM group Spa** has always used mother-tongue translators specialised in Technical / Industrial translations, but this cannot guarantee the absolute accuracy of translations and the use of terminologies that is always appropriate to the specific sector.
For this reason **CIAM group Spa** asks each of its customers, to help us improve the service offered, to report any translation errors, poorly translated texts or other issues.
We therefore ask you to report by fax or by e-mail the texts that you consider unclear, explaining the reasons for this, and if possible also communicating the correct text.
We will send you the updated manual in case of changes to the manual following your notification.



info@ciamgroup.it



+39 075 8016215

Thank you for your collaboration.

1.4 Introduction

CIAM group Spa has always used the best quality materials and their introduction into the company, storage and use in production is constantly checked to ensure the absence of damage, deterioration and malfunctions.
All the construction elements have been designed and manufactured to guarantee a high standard of safety and reliability.
All refrigerated display cabinets are subjected to strict testing before delivery, nevertheless it should be remembered that good performance over time of the product purchased depends on correct use and adequate maintenance.
We therefore invite you to read this manual scrupulously as it contains the indications necessary to maintain the aesthetic and functional characteristics of your display cabinet.



In order to avoid compromising the machine's functionality and safety, particularly complex installation and maintenance activities are not documented in this manual and are carried out exclusively by specialist technicians of the undersigned company.

The use and maintenance manual contains the information necessary for understanding the operating modes of the refrigerated display cabinet and its correct use, in particular: the technical description of the various functional groups, equipment and safety systems, operation, use of the instrumentation and the interpretation of any diagnostic messages, main procedures and information regarding ordinary maintenance interventions.
For correct use of the machine it is assumed that the working environment is adequate to the current regulations in terms of safety and hygiene.

1.5 Manufacturer's contact details

Manufacturer:	CIAM Spa
Address:	Viale dei Pini, 9
	06081 Petrignano di Assisi (PG) Italy
Telephone:	(+39) 075 80161
Fax:	(+39) 075 8016215
Internet:	www.ciamgroup.it
E-mail:	info@ciamgroup.it

1.6 Instructions to request interventions

For assistance, the user must contact the dealer from which the equipment was purchased. For any type of information or clarification concerning use, maintenance, installation, etc. the undersigned company is always available to respond to Customer requests via the e-mail address:

service@ciamgroup.it

1.7 Personnel

This manual is addressed both to the operator and to the technicians authorised to install and maintain the machine.
The machine operators must not perform operations that are reserved for repairers or installers. **CIAM group Spa** is not liable for damages resulting from failure to comply with this prohibition.
A number of professional profiles are identified according to the degree of difficulty of certain operations of installation, operation and maintenance of the refrigerated display cabinet:



SPECIALIST INSTALLER
The specialist installer of **CIAM group Spa** is able to carry out all the assembly operations of the mechanical parts, the wiring of the various systems and initial start-up of the refrigerated display cabinet at the Customer's premises. This operator also has the task of training the personnel responsible for operating the machine and carrying out its testing operations.



USER
Specialist personnel assigned to using the refrigerated display cabinet.
The operator must be perfectly familiar with all the command and control devices and must be able to carry out the following operations through use of the appropriate commands:
• Loading/unloading of products into the display cabinet.
• Setting of the operating temperatures.
• Cleaning operations, recording of control devices during operation
• Making sure that the safety devices are in a good condition and that they are functional.
• Checking of the overall integrity of the machine and its correct operation.



REPAIR TECHNICIAN
The technician/repairer must be perfectly familiar with all the command and control devices of the machine and must be able, if necessary, to operate it and make it work.
The repairer must be able to carry out all the operations of handling and transporting, checking, adjusting and replacing the mechanical and electrical parts and the devices of the machine, which are part of the routine and extraordinary maintenance operations.
They must be authorised by **CIAM group Spa**.

1.8 Applied directives and technical standards of reference

The Refrigerated Display Cabinets have been designed, built and tested in compliance with the following Community directives:
• Machinery directive 2006/42/EC regarding approximation of the laws of the Member States relating to machinery
• Directive 2014/35/EU - Low Voltage
• Directive 2014/30/EU - Electromagnetic Compatibility
• Directive 2011/65/EU - Restriction on the use of certain hazardous substances in electrical and electronic equipment

The harmonised reference standards according to which the unit has been tested and approved are:
• CEI EN 60 335-1 - Safety of household electrical appliances
• CEI EN 60 335-2-89 - Particular requirements for refrigerators

ENVIRONMENTAL CLIMATIC CLASSES

These refrigerating display cabinets have been verified in compliance with climate class 4 (30°C; R.H. 55%):
It remains excluded from the scope of the EEC 97/23 directive (PED) as it falls under Art.3 paragraph 3

RISK ANALYSIS

The risk analysis carried out and the solutions implemented by **CIAM group Spa**made it possible to eliminate most of the residual risks.
The obligation to adhere to the instructions given in this manual, which contains the technical information necessary for correct installation, commissioning, use and maintenance, remains the same.

SCHEDA TECNICA / DATA SHEET

SERIE/ SERIES - TALL BOY		SBUX_TBOY100I	SBUX_TBOY120I
CARATTERISTICHE / CHARACTERISTICS			
Dimensioni (LxPxH) / Dimensions (LxDxH)	**mm**	1000x757x2200	1200x757x2200
Classe climatica - Ambiente / Climatic class - Environment	**°C / % U.R.**	25°C / 60%RH	
Temperatura esercizio vetrina / Showcase operating temperature	**°C**	+4 / +8	
Alimentazione Elettrica / Electric power supply	**V**	230	
	PH	1	
	Hz	50 (CE) / 60 (ETL)	
Potenza media consumata / Average power consumption	**KW/h**	1.35	1.45
Potenza corrente max. assorbita vetrina / Showcase max. absorbed power current	**W**	1900	2100
	A	10.9	11.5
Potenza frigorifera necessaria all'evaporazione / Cooling power for remote application	**W**	2000	2400
Temperatura di espansione di riferimento / Reference expansion temperature	**°C**	-13	
Gas refrigerante / Refrigerant gas		R452A	
Tipo refrigerazione / Refrigeration type		VENTILATED	
Tipo sbrinamento / Defrost type		AUTOMATIC / ELECTRIC	
Illuminazione / Lighting		LED 3000°K	
Vaschetta evapora condensa / Condensing water discharge		SELF HEATING PAN	
Peso vetrina / Showcase weight	**Kg**	260 / 350	300 / 390

OPTIONAL

SBUX_TBOY_DOORS: Kit 2 porte in vetro / Kit of 2 glass doors

CERTIFICAZIONI / CERTIFICATION

CE ETL Intertek Intertek

3 - SAFETY

3.1 General information

The purchaser must instruct the personal assigned to use on the risks, on the safety devices and on the general rules on accident prevention foreseen by the Community directives and by the legislation of the country where the refrigerated display cabinet is installed.

Users/operators must be aware of the position and operation of all controls and features of the machine.
They must also have read this manual in full.
Maintenance interventions must be carried out by qualified operators after having appropriately prepared the machine.



Unauthorised tampering with or replacement of one or several parts of the machine, the use of accessories that modify use of the same and the use of replacement materials other than those recommended, may become the cause of accident risks.



Before carrying out any type of operation, the equipment must always be disconnected from the power supply.



Interventions on electrical parts or components of the refrigeration system must be carried out by specialist personnel in full compliance with current regulations.

3.2 Staff training



The machine is intended for professional use

The purchaser must ensure that the personnel, responsible for using the machine and the maintenance technician, are properly trained and instructed.
For this purpose, the manufacturer is available for advice, clarifications and anything else to ensure the operator and technicians make correct use of the machine.
The manufacturer can be contacted by e-mail: service@ciamgroup.it.

3.3 Reasonably foreseeable misuse

CIAM group Spa declines all responsibility and the warranty is void in the event of negligence at the time of use of the machine or non-compliance by the operator with the user instructions.



Any use other than that specified in this manual is considered incorrect.

During use of the machine, other types of work and activities considered to be incorrect and which in general can pose risks to the safety of the workers and damage to the machine are not permitted.

Predictable incorrect uses are considered:

- Use of the machine for storage and display of products other than the food categories described.

- Incorrect use of the machine by personnel who have not been trained correctly.
- Use of the machine in a way that does not comply with the European provisions on occupational safety.
- Use of non-original and non-machine-specific spare parts.
- Use of the machine in a potentially explosive environment.
- Insufficient maintenance and periodic checks.
- Tampering with guards and safety systems.
- Structural changes or unauthorized changes to operation.
- Maintenance technicians failing to use the D.P.I.

In the event of abnormal behaviour of the machine, any type of intervention is the responsibility of maintenance operators.

3.4 General rules of safety and accident prevention

The instructions or warnings are not intended to replace the accident-prevention safety regulations, supplement them and to encourage their observance.

Dangers !

- Warnings alone do not eliminate danger!
- Failure to comply with the safety recommendations and improper use of the machine can result in an accident risk for you and for others!
- Before carrying out any operation that could constitute dangerous situations, check that near the machine there is a person who is able to provide first aid.
- Keep the workplace tidy and clean. Disorder in the workplace poses a risk.
- The floor must be dry and free from oil or grease stains.
- Avoid unstable positions. Make sure that you are in a safe and balanced position with respect to the machine.
- Any maintenance operation, whether ordinary or extraordinary, must take place when the machine is stationary and only when all the energy sources are switched off. Furthermore, no other form of stored energy must be present.
- The operator must check that no liquid containers are located near the electrical parts.
- Promptly intervene in conditions of danger within the scope of your skills and possibilities to eliminate and reduce the causes of risk.
- Electrical installation and connections from the machine to the respective disconnecting switch must only be carried out by a specialist installer.
- Strictly follow the instructions of the signs to avoid dangerous situations.
- This machine and its electrical equipment have been made to perfection; repairs must only be carried out by a specialist installer using original spare parts.
- Before each shift start, make sure that the safety devices work properly. Carry out simulation tests of the work cycle, verifying correct operation of all the safety devices present on the machine.
- Report any inefficiency of the safety devices or the means of protection immediately to the employer and to all those persons responsible for safety.
- The operator must ensure that the system is not used by unauthorised persons. The system must only be operated by personnel who have been instructed and trained and who:
  - are at least 16 years of age
  - possess the necessary technical knowledge.
  - give reason to believe that they are able to carry out their task reliably.
- Any person who is assigned to operating, manoeuvring, maintaining and/or repairing the machine must first read and understand the user and maintenance manual, in particular the “Safety” chapter. These instructions must be accessible at any time to the persons mentioned above. Any unusual occurrence regarding the system or part of it must be communicated immediately to the department head, to the shift supervisor or to other persons responsible

for safety of the machine; if necessary, stop the system using the dedicated ignition switch and the main switch.
- All safety warnings and indications applied to the system must be respected and followed.
- The use of accessories, tools and consumables other than those that are original or not recommended by the manufacturer may represent a risk of injury and exempt the manufacturer from civil and criminal liability.
- In the environment there must be no harmful or chemically aggressive vapours and/or explosive vapours and no dust or infiltration of dust that could be harmful to the operator or the machine.



Prohibitions !

- Changing the network frequency!
- Removing any type of safety device and/or protective barrier.
- Use of the machine with electric bridges and/or with mechanical means that exclude utilities/ parts of the machine itself.
- The leaving of tools or keys on top of the machine, or near it. After each maintenance operation, carefully check before turning the machine on that all tools, equipment and materials unrelated to the machine have been removed.
- Operating with the machine without guards. Once the maintenance operations have been completed, the mechanical repairer must necessarily reapply them.
- Applying power to the machine by tampering with the main switch and safety devices.
- Climbing up or getting on to the machine. It is forbidden to create walkways or precarious structures designed to cross over the machine.
- Prohibition for the designated operator and/or specialist personnel to alter the technical or physical characteristics of the equipment or to use it for purposes other than those envisaged and documented.
- Disconnecting of a live socket. Electrical equipment could be irreparably damaged.

The safety instructions given in this chapter are to be considered “general”. The more specific indications present in some of the chapters or paragraphs of this manual must be considered an integral part of this chapter.

3.4.1 Attentions for safe operation

- Avoid incorrect use of the power cord. Only cables or section extensions suitable for the power installed in the machine.
- Protect the cable from high temperatures, oil and sharp edges.
- Replace the cables where wear or damage occurs on them.
- Variations with respect to normal operation (increased power absorption, temperatures, vibrations, noises or signals from the safety and alarm system) alert to the fact that the operation is not correct. To prevent faults, which can directly or indirectly cause serious damage to persons or property, maintenance personnel must be promptly informed.
- Before starting any work, concentrate all your attention on what you are about to do. It is necessary to be extremely careful and to remain alert with promptness of reflexes: these are fundamental conditions for the operator. If the person suffers from any disorder or unfavourable physical condition, even minor, which could reduce their degree of vigilance, they must avoid putting the machine into operation or acting on aggregate or accessory equipment.
- Be very careful during the machine transportation stages of when handling of the annexed equipment! Refer to **“4.5 Handling the equipment”**on page 22 before carrying out any handling operation.
- When it issuspected that the system or part of it is no longer safe, turn it off and make sure it does not start inadvertently. Entrust the control and/or any repairs to specialist personnel trained on use of the machinery or, possibly, contact the manufacturer.

3.5 Safety devices applied on the machine

3.5.1 Fixed protections (fig 5)

The fixed type protections consist of fixed perimeter guards (screwed or welded), which have the function of preventing access to internal parts of the equipment (example Fig. 5 part.1-2).

It is absolutely forbidden to restart the machine, after maintenance, without correctly restoring the panels.

Periodically check the integrity of the fixed guards and the relative fastenings to the structure, with particular attention to the protection panels.

3.5.2 Electrical power sectioning (Fig. 6-7-8)

The equipment is not equipped with a disconnector on board that can simultaneously remove the voltage from the two poles (phase and neutral) of the power supply. In fact, pressing the **OFF** key on the electronic control unit (fig.6) only stops operation of the display cabinet, but does not remove current from the electrical components inside the display cabinet (lights, fans and electric base). Sectioning can be performed by means of a plug socket (fig.7), but it is highly recommended that the installer places on the electrical connection, upstream of the appliance, an omnipolar switch (fig.8) that ensures full disconnection of the display cabinet from the mains supply.

Pressing the OFF key on the electronic control unit stops the display operation but does not cause the electrical energy to be disconnected. Therefore, in the event of maintenance work, it is necessary to completely disconnect the display cabinet from the electrical mains by removing the power plug (fig.7) or by acting on the general switch installed upstream of the display cabinet (fig.8).

The isolating switch is not padlockable in the open circuit position. Therefore, in the event of maintenance operations in which the operator is not able to prevent accidental closing of the circuit by others, completely disconnect the appliance from the mains.

If this is not possible, display a sign warning not to switch on the power supply for the duration of the work and also display a sign in a visible position, with the wording **MACHINE UNDER MAINTENANCE** (fig.9)

Before restoring the power supply to the machine, make sure that the safety conditions have been re-established, remove any tools or instruments used and make sure that there are no persons in the work area. Follow the envisaged restart procedure.

3.6 Residual risks

During the project phase all the zones or parts at risk were assessed, and all the necessary precautions were taken to avoid risks to persons and damage to the Refrigerated Display Cabinets as indicated in the previous paragraphs.

Although the machine is equipped with safety systems, there are still a number of risks that cannot be eliminated but instead are reduced by corrective actions by the final integrator and by performing correct operating procedures.

Periodically check the operation of all the safety devices. Do not disassemble the fixed type protections of the machine.
Do not introduce foreign objects or tools into the operation and work area of the equipment.

The following is a summary of the risks that remain in the machine during the phases of:
- Normal operation
- Adjustment and fine-tuning
- Maintenance
- Cleaning.

3.6.1 Electrocution

- Risk of breakage or damage, with a possible lowering of the level of safety, of the components of the electrical equipment following a short circuit.
- Before switching on the power supply, make sure that there is no maintenance work in progress.

BEFORE MAKING THE CONNECTION, check that the c.c. current at the installation point it does not exceed the one indicated on the protection switches in the electrical panel, otherwise the user is obliged to provide the appropriate limitation devices

It is strictly forbidden to carry out any type of electric modification to avoid creating additional hazards and consequent risks that are not foreseen.

3.6.2 Fire

In the event of a fire, always immediately switch off the main switch of the main power supply line (fig.8).

3.6.3 Explosive atmosphere

The machine is not suitable for work in environments classified as ATEX risk.

It is forbidden to use the same in a classified atmosphere at risk of fire or explosion or partially such.

3.6.4 Pressurised gas

The machine is equipped with a pressurised gas refrigeration system. The piping and part of the cooling system containing the pressurised gas is to be considered at risk of explosion.

Pay the utmost attention to avoid damaging the pipes containing the gas. During maintenance work on the system, make sure that the pressure has been discharged.

3.6.5 Sliding 

The leaking of lubricants or food products in areas surrounding the machine can cause personnel to slip.



Check that there are no leaks and always keep these areas clean.

3.6.6 Stumbling 

The disorderly depositing of material in general can constitute a tripping hazard and partial or total limitation of escape routes if required.
Ensure operational, transit and escape routes free from obstacles and comply with the applicable regulations.

3.6.7 Cutting 

Handling of the glass panels and glass shelves during installation, maintenance, cleaning and in any case also during daily use of the display cabinet, entails the risk of cutting in case of glass breakage.



Pay the utmost care to avoid damaging or breaking the glass. Use protective gloves when handling them.

3.6.8 Circuit faults

Due to possible failures, the safety circuits may lose some of their effectiveness with relative lowering of the safety level.



Perform periodic checks of the operating status of the safety devices present in the machine.

3.6.9 Gas leaks 

If refrigerant gas leaks occur during installation, use or maintenance of the display cabinet, immediately ventilate the room.



If the refrigerant gas comes into contact with the fire, toxic gases may be generated.

3.6.10 Low temperatures (cold)

During normal operation, various “cold” devices are present in the machine.
The refrigerant gas pipes, the heat exchanger inside the display cabinet, etc., these parts of the machine if in prolonged contact with parts of the body can cause incidents of freezing or “cold burns”.

Always use protective gloves when working on these parts of the machine.

3.6.11 High temperatures (hot)

The display cabinet can be fitted with heating accessories:
- Water bath (maximum operating temperature 90°C)
- Hot plate (maximum operating temperature 65°C)
- Evaporator (maximum operating temperature 35°C)

These accessories heat up during operation and can therefore cause burns if in contact with parts of the body.

Always use protective gloves when working on these parts of the machine.

3.7 Safety plates applied to the machine

Based on the residual risks of various types, identified for the machine, **CIAM group Spa** has equipped the Refrigerated Display Cabinets with danger, warning and obligation sings, defined according to the European regulations on graphic symbols to be used on systems (Directive 92/58/EEC).
The plates in question are in a clearly visible position as shown in figure (10).

It is absolutely forbidden to remove the warning signs on the machine.
CIAM group Spa declines any responsibility for the safety of the Refrigerated Display Cabinets in the event of non-compliance with this prohibition and for any accidents or damage to persons, property or animals due to the absence of safety labels on the machine.

In the event that the plates deteriorate or in general are not particularly visible or are absent, replacement is mandatory, requesting them directly from **CIAM group Spa**.

INGOMBRI APPARECCHIATURE		/	EQUIPMENT DIMENSIONS	
Le quote evidenziate nel prossimo paragrafo rappresentano rispettivamente:			The quotes highlighted in the next paragraph respectively represent:	
Hp	altezza spazio refrigerato		Hp	refrigerated space height
Hs	altezza vassoi espositivi		Hs	display trays height
Ht	altezza totale		Ht	total height
P	profondità murale		P	wall depth
L	lunghezza murale		L	wall length

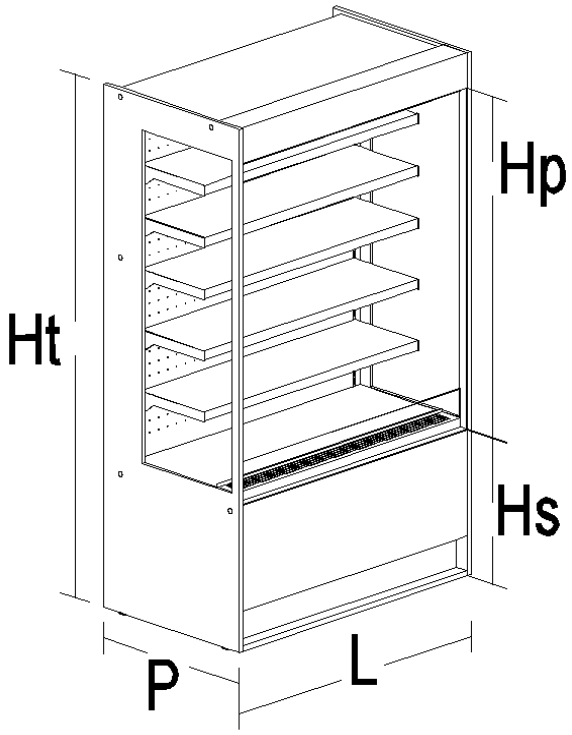

MODELLO MODEL	P	L	Hp	Hs	Ht
	mm	mm	mm	mm	mm
100	757	1000	1396	653	2200
120	757	1200	1396	653	2200

LIMITI DI CARICO / LOAD LIMITS

Per il rifornimento della vetrina è necessario osservare le seguenti regole:

- Disporre il prodotto uniformemente, evitando zone vuote
- Distanziare il prodotto l'uno dall'altro per favorire la corretta circolazione dell'aria.
- Disporre il prodotto in modo da non superare il limite di carico previsto.
- Non caricare con eccessivo peso le mensole della vetrina. Vedi tabella sotto.
- Evitare di coprire con il prodotto eventuali griglie di mandata e/o aspirazione.

La parte evidenziata con tratto scuro rappresenta la zona entro cui deve essere posto il prodotto refrigerato.

È fondamentale non superare il limite previsto al fine di non alterare la circolazione corretta di aria ed evitare così una temperatura del prodotto più elevata ed un possibile rischio di formazione di blocchi di ghiaccio sull'evaporatore.

The following rules must be observed when filling the display case:

- Arrange the product evenly, avoiding empty areas.
- Keep the product at a distance from each other to ensure proper air circulation.
- Arrange the product so that it does not exceed the expected load limit. See table.
- Do not overweight the shelves of the window.
- Avoid covering with the product any grids of delivery and/or suction.

The part highlighted with dark line represents the area in which the refrigerated product is to be placed.

It is essential not to exceed the limit provided in order not to alter the correct circulation of air and thus avoid a higher temperature of the product and a possible risk of ice blocks forming on the evaporator.

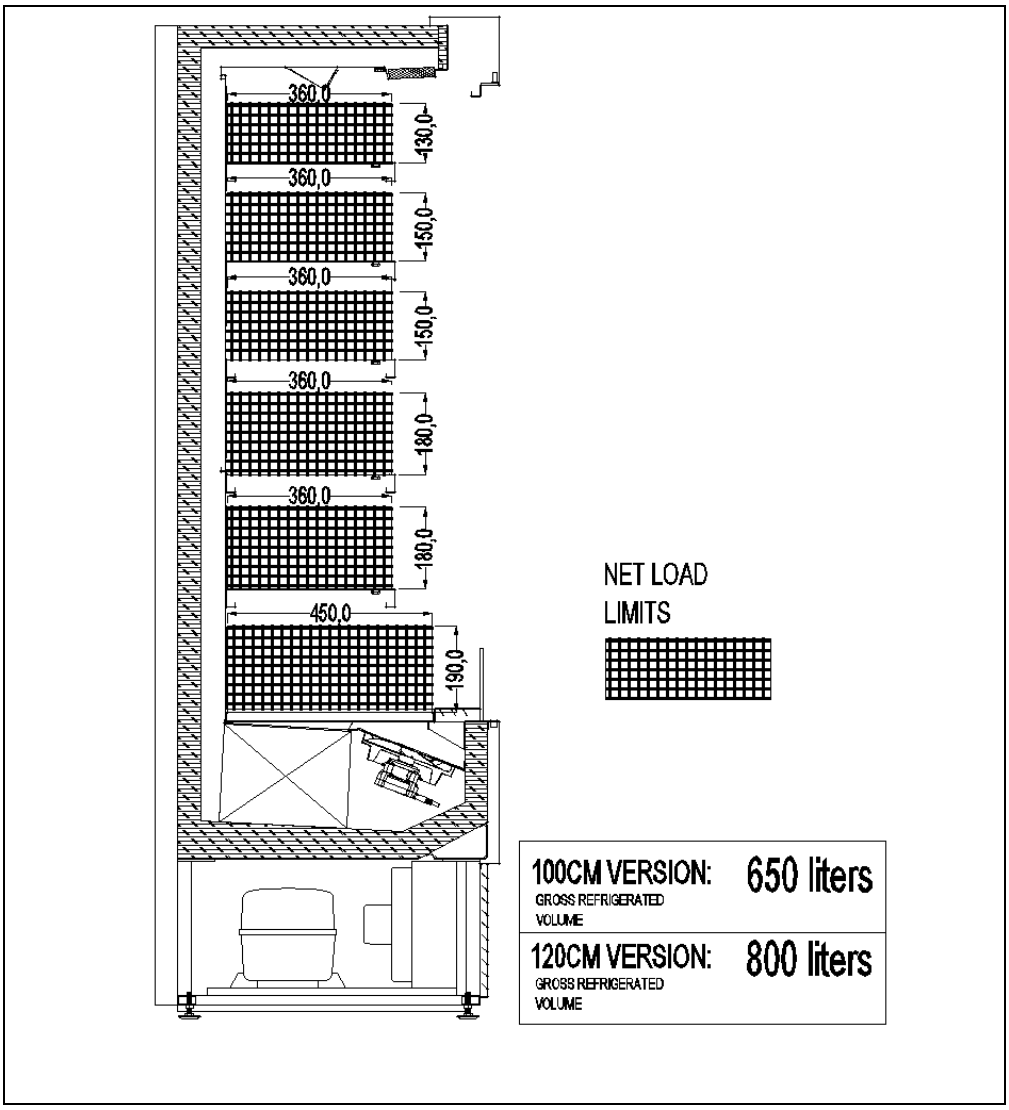

CARICO MASSIMO CONSENTITO UNIFORMEMENTE DISTRIBUITO (Kg) / MAXIMUM LOAD ALLOWED UNIFORMLY DISTRIBUTED (Kg)

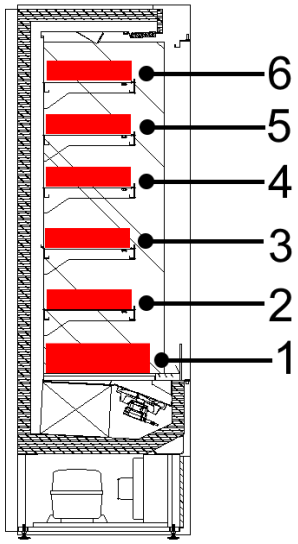

Lunghezza Length cm	1 Piano inferiore Lower floor	2 Mensola Shelf	3 Mensola Shelf	4 Mensola Shelf	5 Mensola Shelf	6 Mensola Shelf
100	30	25	25	25	25	25
120	36	30	30	30	30	30

ETICHETTA CE / CE DATA PLATE

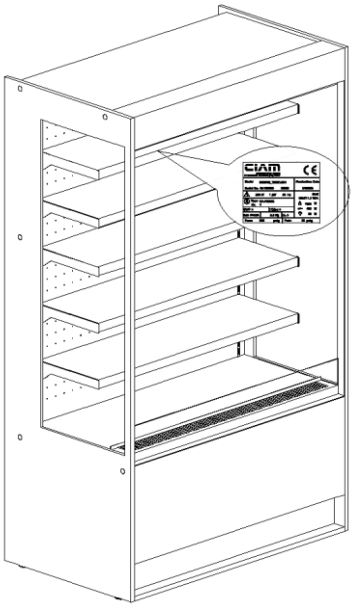

DATA PLATE CONTENT

CIAM
REFRIGERATION DESIGN
PETRIGNANO DI ASSISI (PG) ITALY
CE

Model 1			Production Date 4
Serial No. 2		3	
5 V/ 6 ph/ 7 Hz			17 MAX 18 W/A
Type 8 No. 9			19 W
GWP = 10	CO2eq = 11		20 W
Gas 12	13 Kg	Cl. 14	21 W
Pmax 15 psig		Pmin 16 psig	

1. Nome commerciale / Commercial name of the unit
2. Numero seriale/ Identification serial number
3. Numero di ordine/ Order number
4. Data di produzione / Production date
5. Tensione / Voltage
6. Fasi / Phases
7. Frequenza / Frequency
8. Tipo compressore / Compressor type
9. Numero di compressori / Number of compressors
10. Global Working Potential
11. Tons of CO_2 equivalent
12. Tipo refrigerante / Refrigerant type
13. Peso refrigerante / Refrigerant weight
14. Classe climatica / Climatic rate
    (Cl.3 = +25°C/60% U.R.; Cl. 4 = +30°C/55% U.R.)
15. Alta pressione di test / Test pressure – system high pressure side
16. Bassa pressione di test / Test pressure – system low pressure side
17. Massima tensione nominale/Max voltage rating
18. Massima corrente nominale /Max nominal current
19. Massima potenza in defrost / Max. power absorbed during defrost
20. Potenza assorbita dai riscaldatori / Nominal power absorbed by heating elements
21. Potenza illuminazione / Lighting nominal power

CCOMANDI RAPIDI / QUICK COMMANDS

ACCENSIONE POWER ON

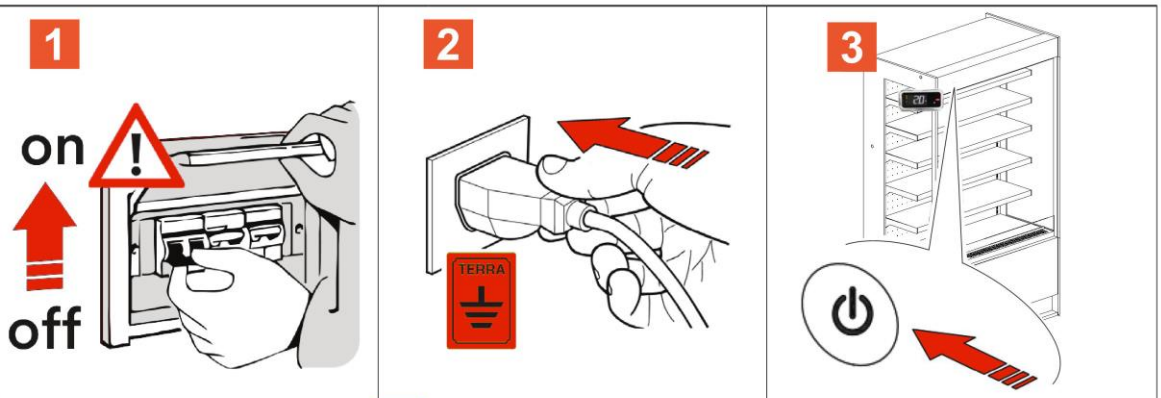

REGOLAZIONE ADJUSTMENT



1	Se premuto aumenta il valore visualizzato sul display. When pressed increases the value shown on the display.
2	Se premuto diminuisce il valore visualizzato sul display. When pressed decreases the value shown on the display.
3	Se premuto avvia il ciclo manuale di sbrinamento. When pressed starts the manual defrost cycle.
4	Se premuto memorizza il valore impostato. When pressed stores the set value.
5	Se premuto accende le luci di illuminazione della vetrina. When pressed turns on the lights illuminating the display case.
6	Se premuto avvia il funzionamento della vetrina. When pressed starts operation of the showcase.

SPEGNIMENTO POWER OFF

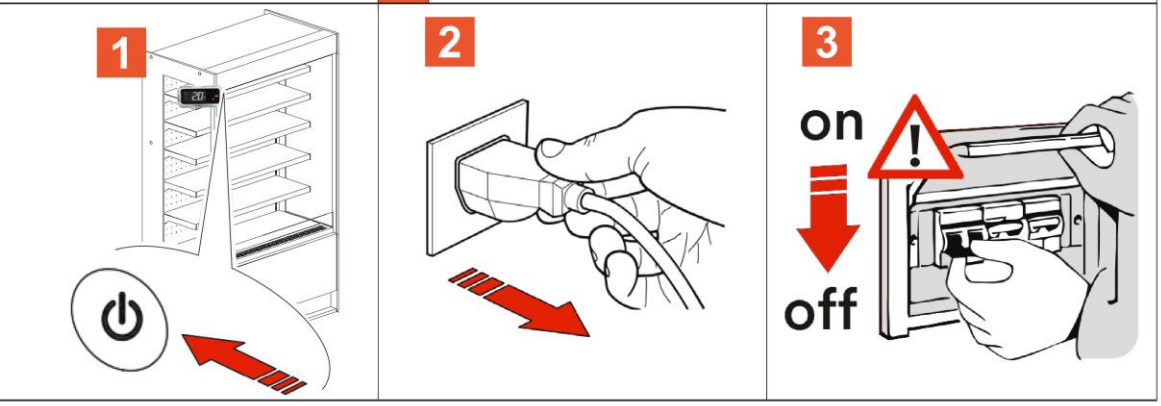

PULIZIA E MANUTENZIONE /CLEANING AND MAINTENANCE

1 – BEFORE PROCEEDING....



ATTENTION BEFORE ANY
MAINTENANCE WORK
DISCONNECT THE EQUIPMENT
FROM THE ELECTRICITY NETWORK.

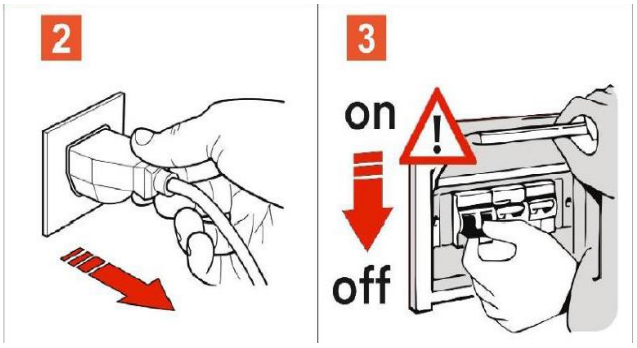

2 – GENERAL CLEANING

OPERAZIONE DI PULIZIA - CLEANING OPERATION		PREQUENZA - FREQUENCY
	PULIZIA SUPERFICI IN ACCIAIO INOX CLEANING IN STAINLESS STEEL SURFACES	Settimanale - Weekly
	PULIZIA SUPERFICI IN MATERIALE PLASTICO CLEANING SURFACES IN PLASTIC MATERIALS	Settimanale - Weekly
	PULIZIA SUPERFICI IN VETRO CLEANING GLASS SURFACES	Giornaliero - Daily
	PULIZIA SUPERFICI IN LEGNO CLEANING WOODEN SURFACES	Settimanale - Weekly
	SBRINAMENTO TOTALE TOTAL DEFROSTING	Massimo ogni 15 giorni Maximum every 15 days





3 – CONDENSER CLEANING



BEFORE PERFORMING THIS OPERATION, DISCONNECT THE EQUIPMENT FROM THE ELECTRICITY NETWORK.



THIS OPERATION MUST BE CARRIED OUT BY QUALIFIED PERSONNEL AND WITH APPROPRIATE PROTECTIONS AND APPROPRIATE TOOLS.

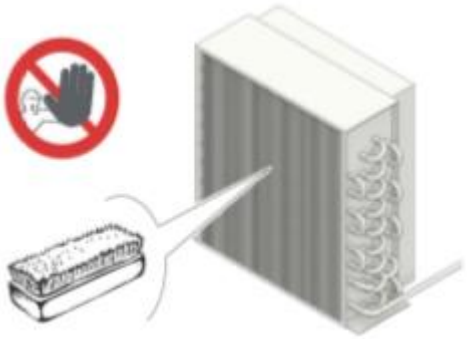

THE CLEANING OF THE CONDENSER MUST BE MADE ON A MONTHLY BASIS.

WARNING

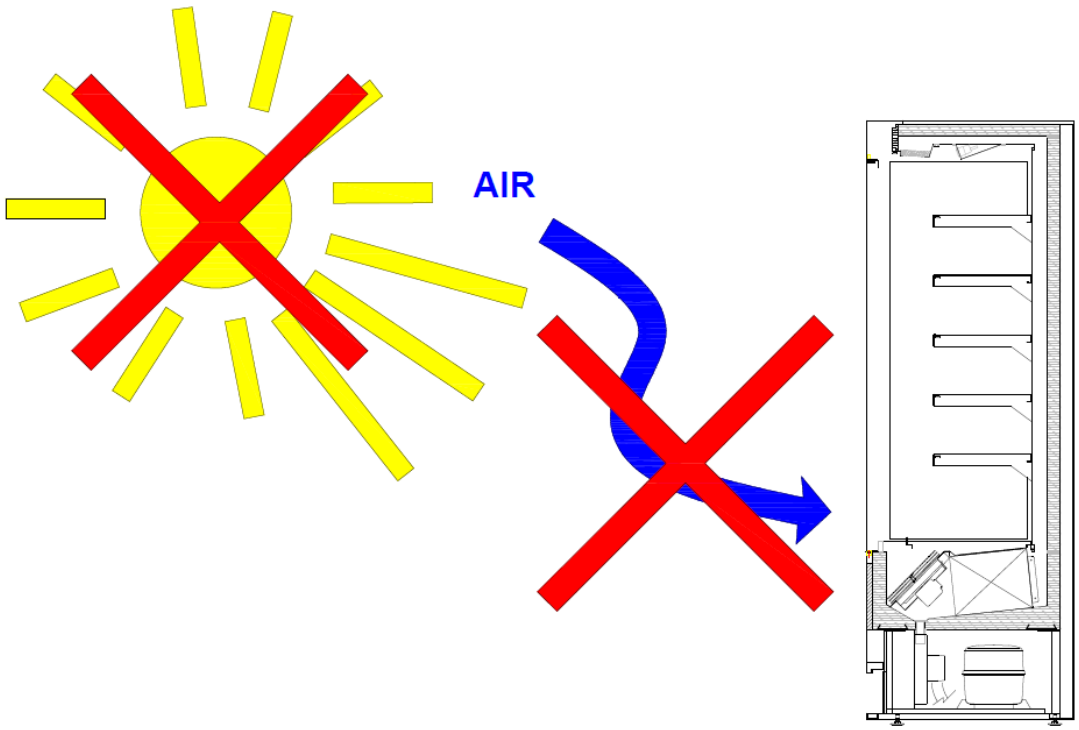

NO ESPOSIZIONE A RAGGI SOLARI DIRETTI
NO EXPOSURE TO DIRECT SUNLIGHT

NO FLUSSI DI ARIA ESTERNA
NO EXTERNAL AIR FLOWS

CLIENTE	COMMESSA	OGGETTO	DESIGNER	DATA	TAV.	REV.	SCALA
CLIENTE	...	..	Giovanni Ziarelli	..	1	A	1:20

CIAM REFRIGERATION DESIGN

22AC.MUR_TN

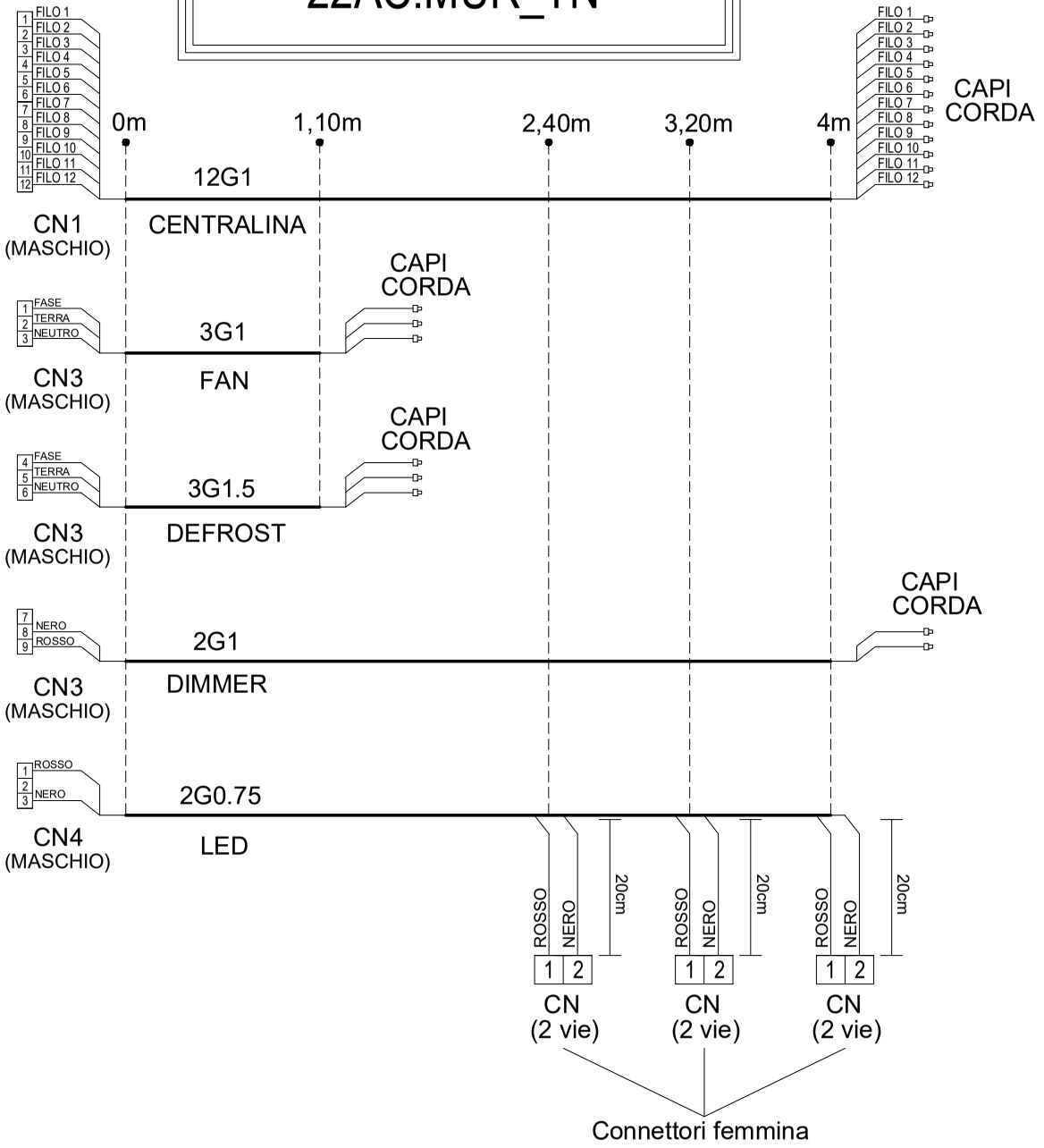

CLIENTE	COMMESSA	OGGETTO	DESIGNER	DATA	TAV.	REV.	SCALA
CLIENTE	...	..	Giovanni Ziarelli	..	1	A	1:20

CIAM REFRIGERATION DESIGN

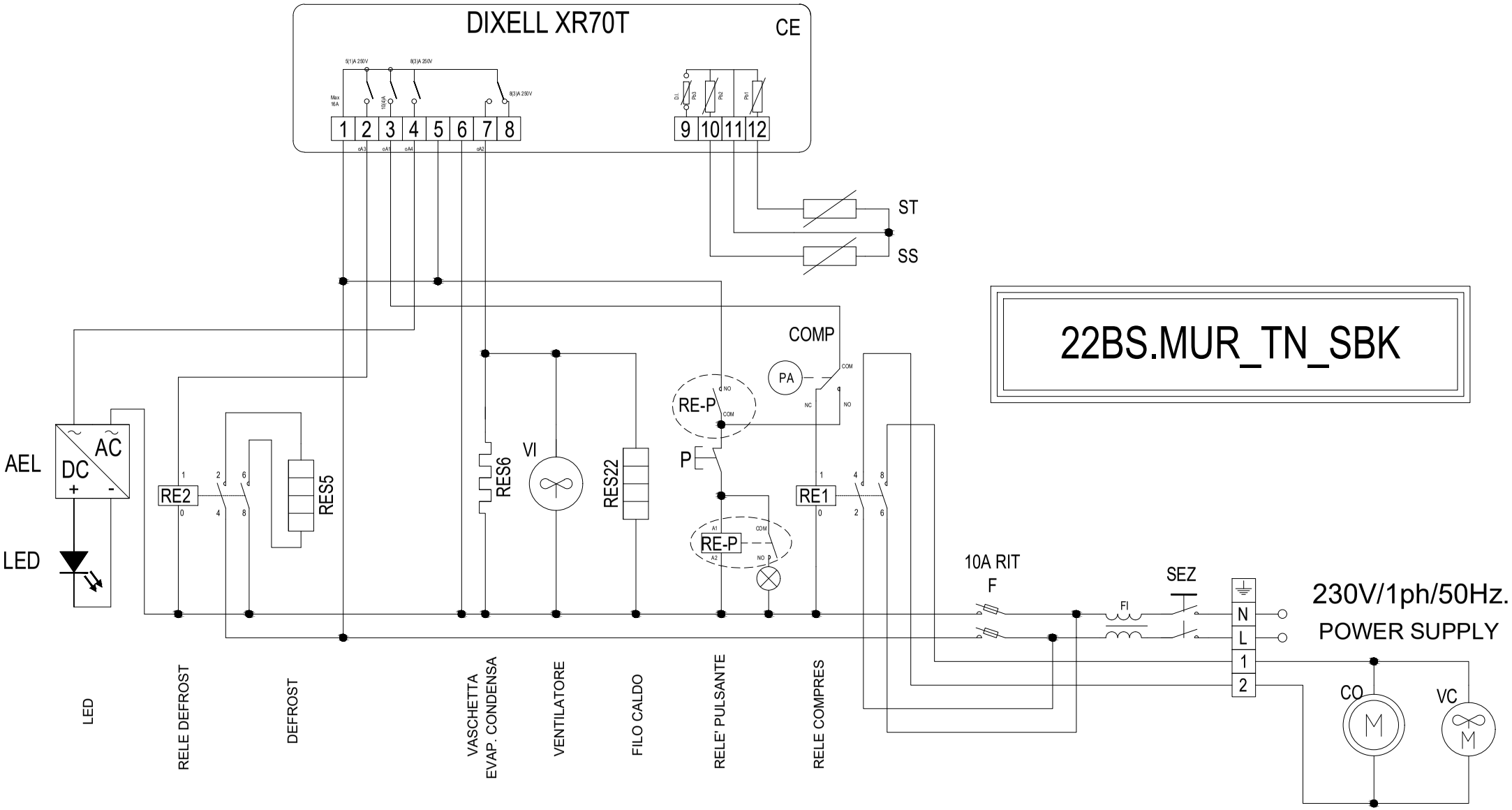

MOD 09-01E

CLIENTE	COMMESSA ..	OGGETTO ..	DESIGNER Giovanni Ziarelli	DATA ..	TAV. 1	REV. A	SCALA

CIAM REFRIGERATION DESIGN

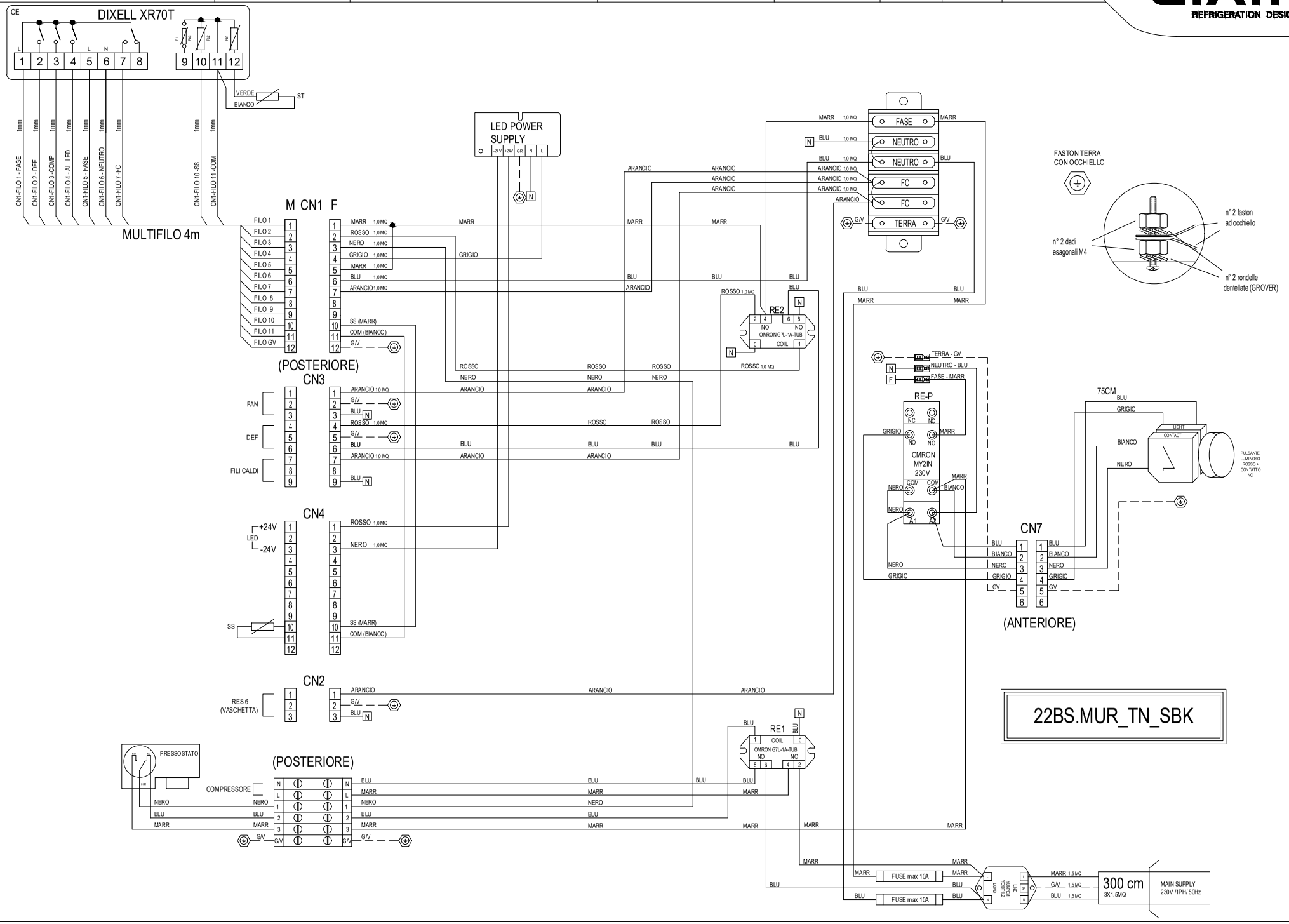

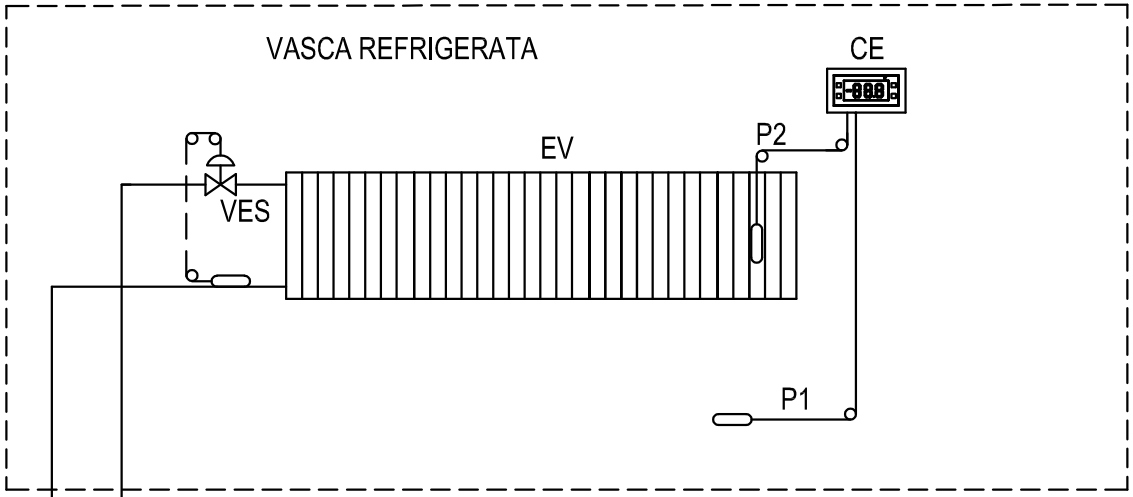

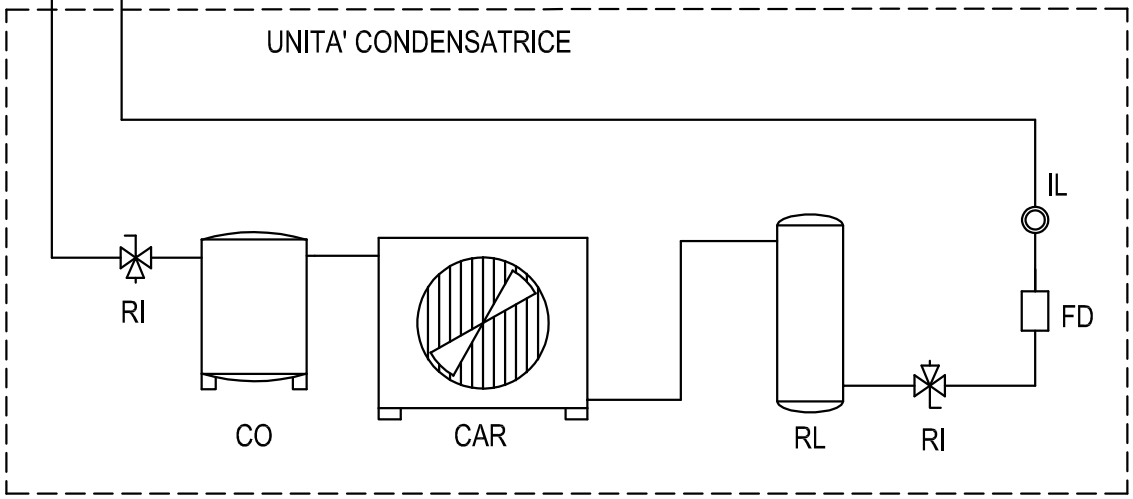

CE Centralina elettronica - Electronic Control

CAR Condensatore ad aria - Air Condenser

CO Compressore - Compressor

EV Evaporatore - Evaporator

FD Filtro Deidratatore - Filter Drier

IL Indicatore Liquido - Sight Glass

P1 Sonda ambiente - Ambient temperature probe

P2 Sonda sbrinamento - Defrosting Probe

RI Rubinetto Intercettazione - Refrigerant Tap

RL Ricevitore di Liquido - Liquid Receiver

VES Valvola di espansione - Expansion Valve

Certified Quality System ISO 9001:2008

Rugosità - Ra 3,2

QUOTE SENZA INDICAZIONE DI TOLLERANZA - Grado di precisione medio UNI 5307

0÷6	6÷30	30÷120	120÷315	315÷1000	1000÷2000	3÷6	6÷30	30÷120	oltre 120	Smussi e Raggi
±0,06	±0,1	±0,15	±0,2	±0,3	±0,5	±1°	e 30'	e 20'	e 10'	0,3÷0,8

TRATT. SUPERFICIALE

Via dei Pini n°9
06081 Petrignano d'Assisi PG ITALY
T +39 075 80161 F +39 075 8016217

CIAM REFRIGERATION DESIGN

www.ciamweb.it info@ciamgroup.it

REV.	DATA	DESCRIZIONE
01	2020	Emissione
02	..	..
03	..	..

VERIFICA

APPROVAZIONE

DENOMINAZIONE **Vetrina refrigerata temp. positiva**
Schema frigorifero positiva unità interna a valvola

Togliere Bavature

SCALA 1:20

DESIGNER Pascolini

DATA 2020

P / N **SIF-RV-V**

FILE NAME SIF-RV-V_impianto a valvola

FOGLIO 01

MATERIALE ..

Q.tà ..

FINITURA ..

Peso (Kg) ..

A termini di legge ci riserviamo la proprietà di questo disegno con divieto di riprodurlo o renderlo noto a terzi senza nostra approvazione

Tolleranze generali vedi tabella

NOTES FOR DESIGNERS AND INSTALLERS TO ALLOW A PROPER COMPRESSOR BREATHING

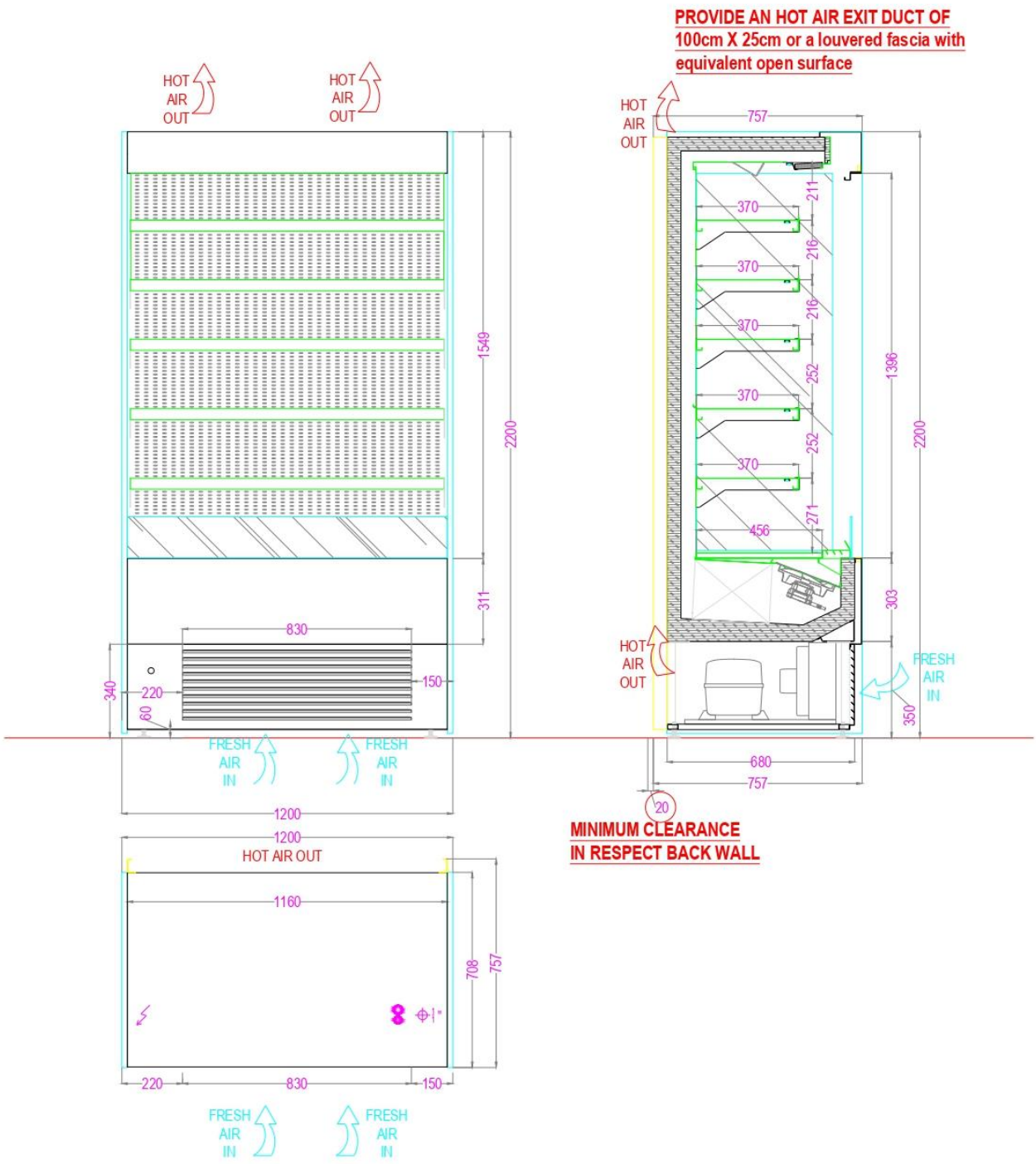

RICAMBI / SPARE PARTS

PROSPETTO / ELEVATION VIEW - Tav. 01

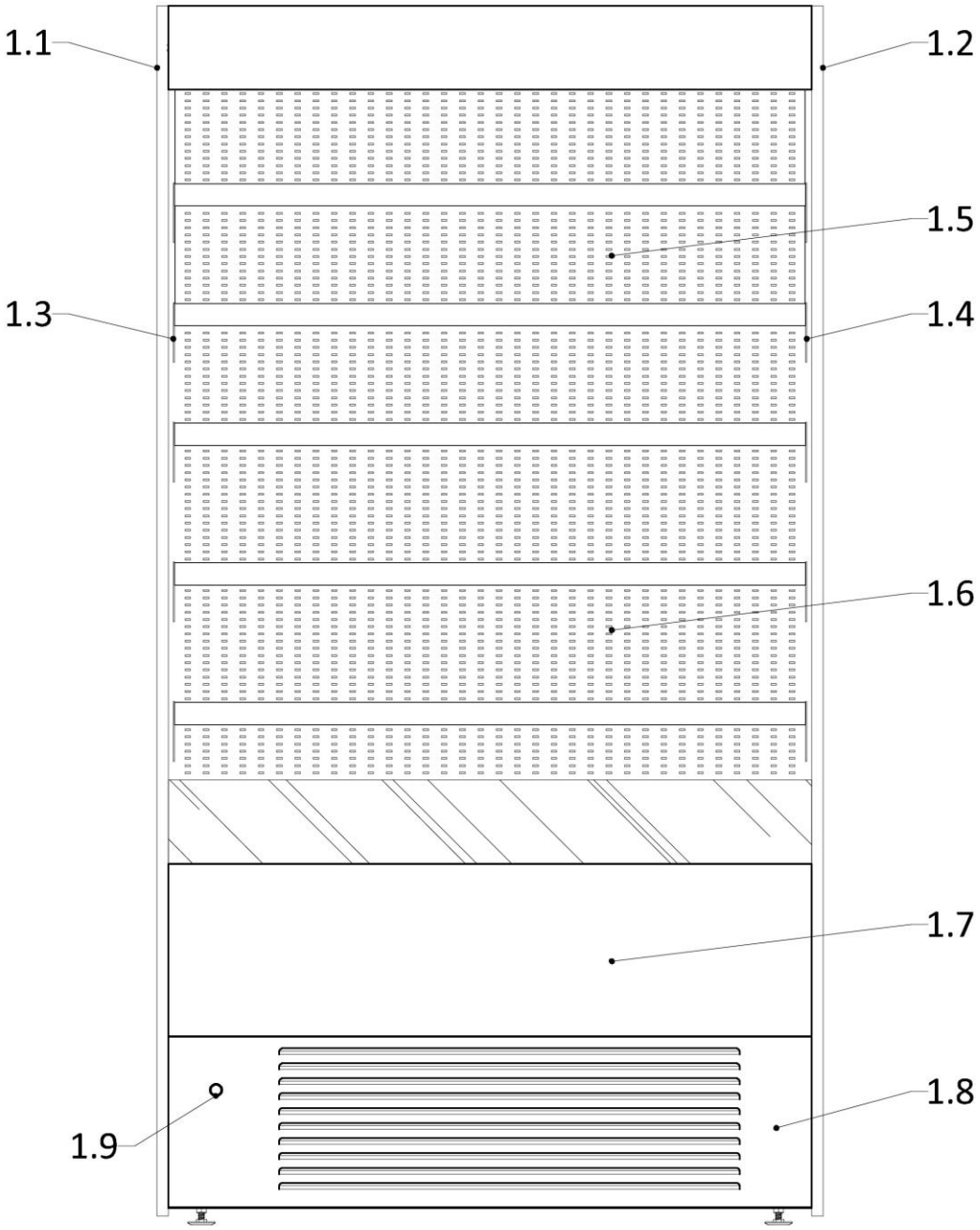

SEZIONE / SECTION VIEW - Tav. 02

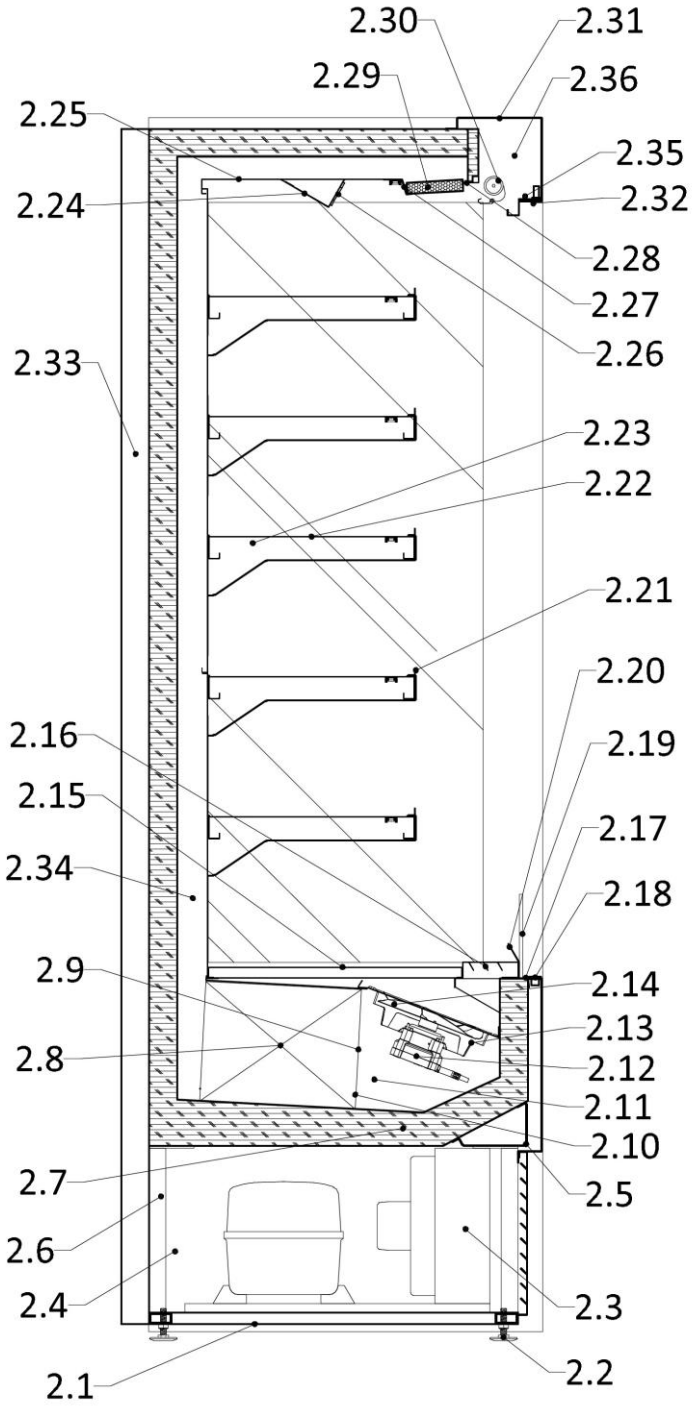

VASCA COIBENTATA / INSULATED TANK - Tav. 03

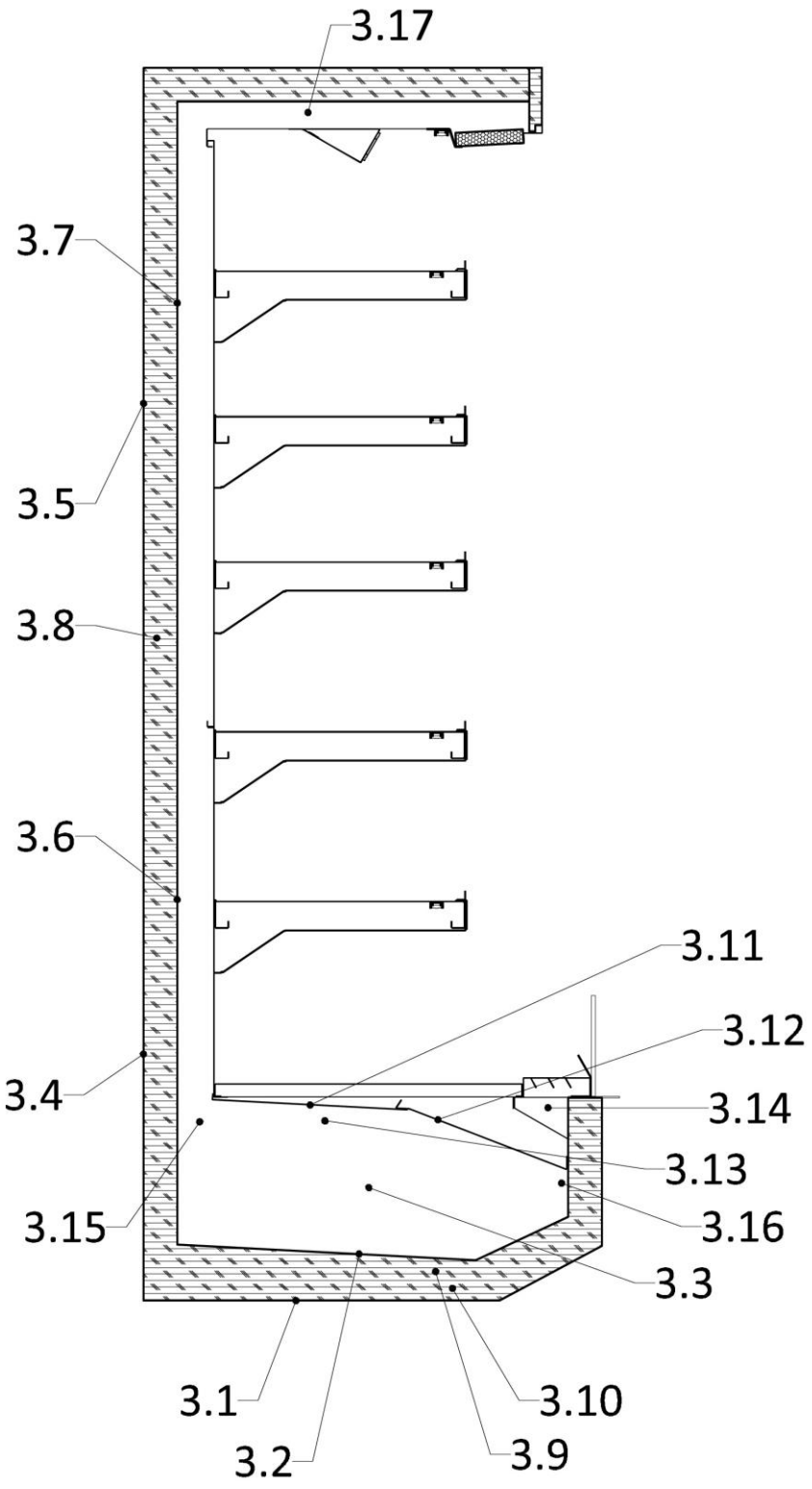

UNITÀ CONDENSATRICE / CONDENSING UNIT - Tav. 04

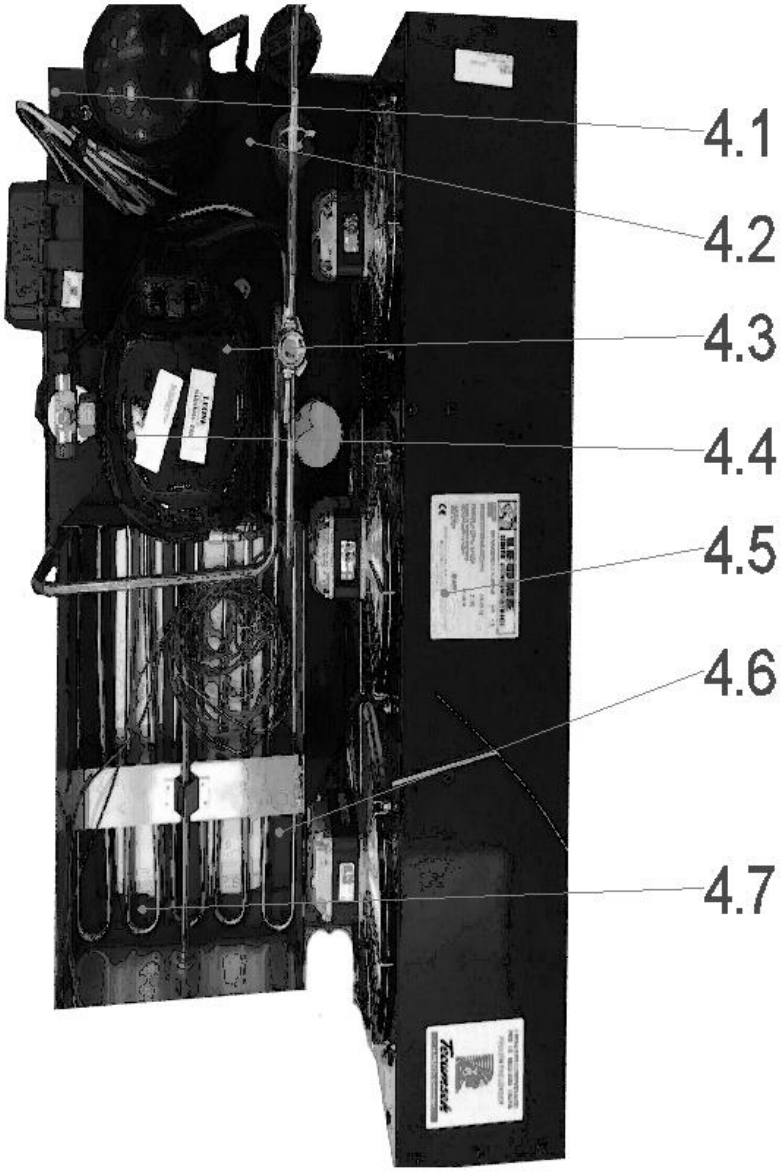

BASETTA ELETTRICA / ELECTRICAL BOARD - Tav. 05

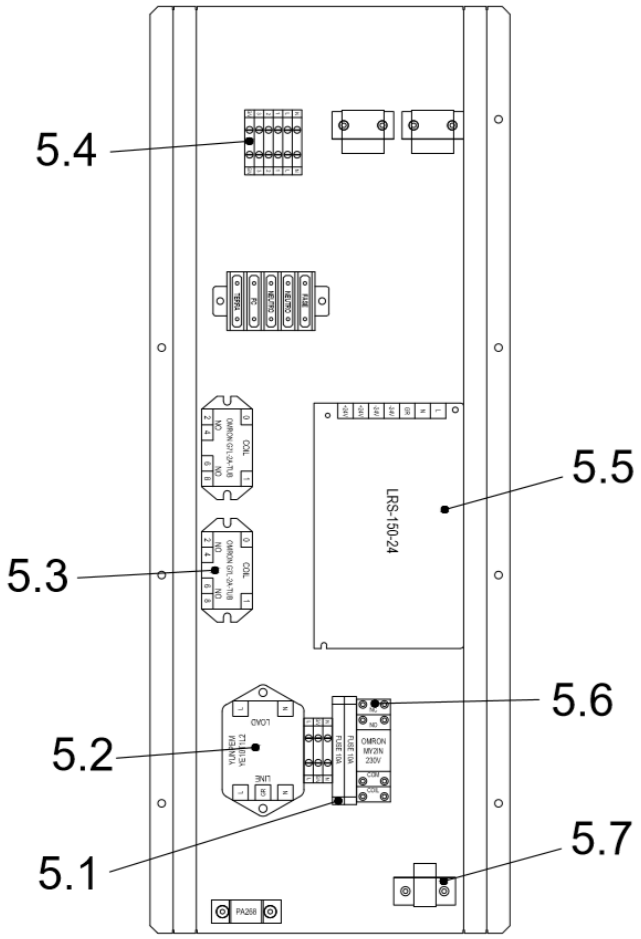

STRISCE LED / LED LIGHTING STRIPS - Tav. 06

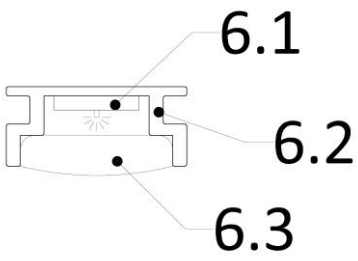

OPTIONALS - Tav. 07

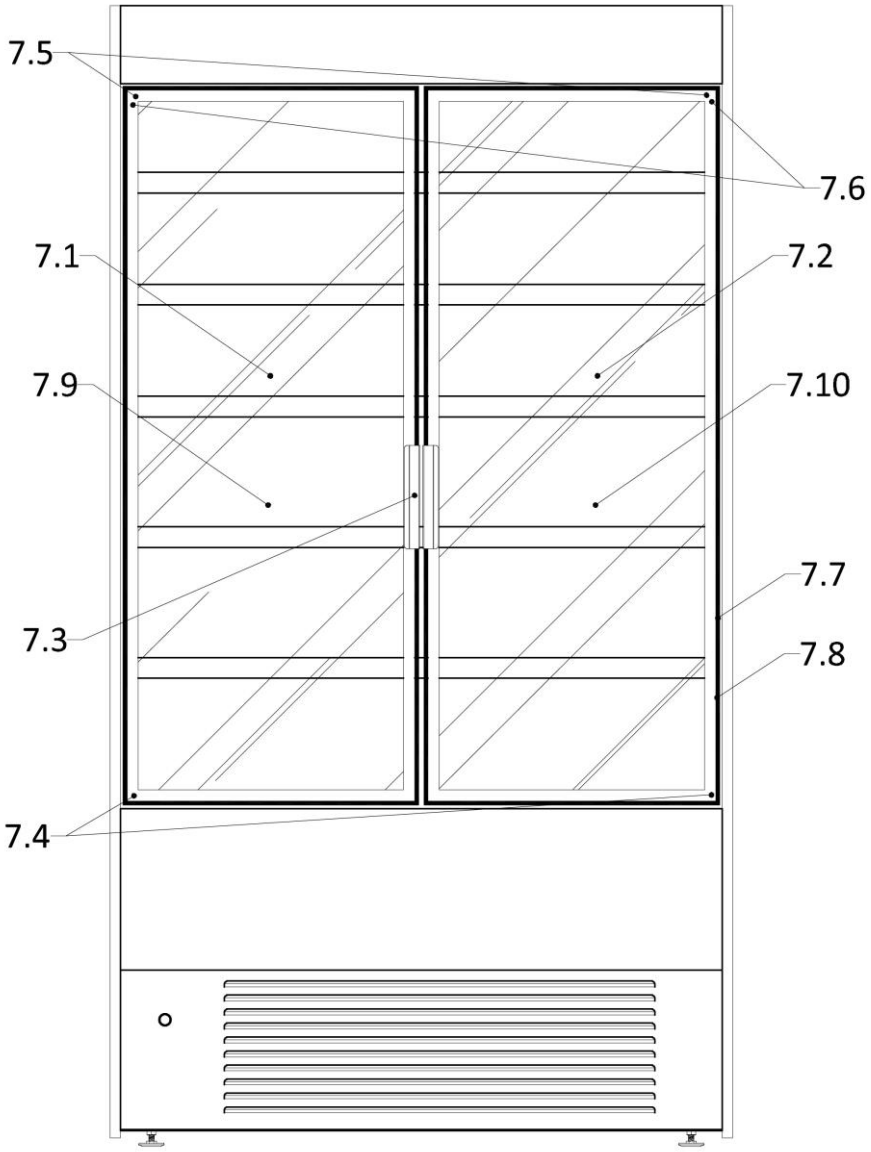

TAV. 01

MODEL		ITEM	ARTICOLO	DESCRIZIONE	DESCRIPTION		QT.À / QT.Y
100	120						
O	O	1.1	14-008-00290	Fianco SX camera singola serigr. RAL 9005	Left side glass - RAL 9005 serigraphy	№	1
O	O	1.2	14-008-00291	Fianco DX camera singola serigr. RAL 9005	Right side glass - RAL 9005 serigr.	№	1
O	O	1.3	50-034-037	Sostegno SX ripiano – RAL 9005	Left bracket	№	5
O	O	1.4	50-034-038	Sostegno DX ripiano – RAL 9005	Right bracket	№	5
O		1.5	50-040-079	Schienale superiore – RAL 9005	Upper back panel – RAL 9005	№	1
	O	1.5	50-040-028	Schienale superiore – RAL 9005	Upper back panel – RAL 9005	№	1
O		1.5	50-040-080	Schienale inferiore – RAL 9005	Lower back panel – RAL 9005	№	1
	O	1.6	50-040-029	Schienale inferiore – RAL 9005	Lower back panel – RAL 9005	№	1
O		1.7	50-040-081	Pannello frontale – RAL 9005	Front panel – RAL 9005	№	1
	O	1.7	50-040-020	Pannello frontale – RAL 9005	Front panel – RAL 9005	№	1
O		1.8	50-003-175	Mascherina motore – RAL 9005	Engine covering – RAL 9005	№	1
	O	1.8	50-003-026	Mascherina motore – RAL 9005	Engine covering – RAL 9005	№	1
O	O	1.9	22AC.RE-PRES	Pulsante – spia di sicurezza (kit comprensivo di relè e cablaggio)	Button – security indicator light (supplied with relay + cabling kit)	№	1

TAV. 02 (CE)

MODEL		ITEM	ARTICOLO	DESCRIZIONE	DESCRIPTION		QT.À / QT.Y
100	120						
O		2.1	17ZMCL96L66P32H	Basamento tubolare	Tubular support	№	1
	O	2.1	17ZMCL116L66P32H	Basamento tubolare	Tubular support	№	1
O	O	2.2	17PA1040	Piedini sostegno basamento	Base feet	№	4
O		2.3	15UCMUR100	Unità condensatrice	Condensing unit	№	1
	O	2.3	15UCMUR120	Unità condensatrice	Condensing unit	№	1
O	O	2.4	22BS.MUR.SB	Basetta elettrica	Electric board	№	1
O	O	2.5	50-006-194	Sostegno basamento SX	Left basement support	№	1
O	O		50-006-195	Sostegno basamento DX	Right basement support	№	1
O		2.6	50-011-174	Schienale basamento	Basement back	№	1
	O	2.6	50-011-109	Schienale basamento	Basement back	№	1
O	O	2.7	25PL32G	Piletta di scarico	Drain tube	№	1
O		2.8	15EV.MURH22P68-78	Evaporatore	Evaporator	№	1
	O	2.8	15EV.MURH22P68-98	Evaporatore	Evaporator	№	1
O		2.9	22RC/MUR10	Resistenza sbrinamento	Defrost heat resistor	№	1
	O	2.9	22RC/MUR12	Resistenza sbrinamento	Defrost heat resistor	№	1
O	O	2.10	15ORIF03/CODS	Orifizio per valvola	Valve orifice	№	1
O	O	2.11	15TES2/CODS/452	Valvola di espansione	Expansion valve	№	1
O	O	2.12	15ECM12-10-4V	Ventilatore	Fan engine	№	2
O	O	2.13	15G200P	Anello ventilatore	Fan ring	№	2
O	O	2.14	15V200-28P	Pale ventilatore	Fan blades	№	2
O		2.15	50-012-185	Vassoi – RAL 9005	Trays – RAL 9005	№	2
			50-012-186	Vassoio terminale – RAL 9005	Lateral tray – RAL 9005	№	1
	O	2.15	50-012-131	Vassoi – RAL 9005	Trays – RAL 9005	№	2
			50-012-132	Vassoio terminale – RAL 9005	Lateral tray – RAL 9005	№	1
O		2.16	50-026-089	Griglia di ripresa	Air return grid – RAL 9005	№	1
	O	2.16	50-026-036	Griglia di ripresa	Air return grid – RAL 9005	№	1
O		2.17	50-001-515	Piattina frontale	Front plate – RAL 9005	№	1
	O	2.17	50-001-338	Piattina frontale	Front plate – RAL 9005	№	1
O	O	2.18	50-033-058	Piastra inf. copriforo porte – RAL 9005	Lower cover plate – RAL 9005	№	2
O		2.19	14-003-00019	Deflettore	Air baffle	№	1
	O	2.19	14-003-00018	Deflettore	Air baffle	№	1
O		2.20	50-026-090	Portaprezzo inferiore – RAL 9005	Lower price holder – RAL 9005	№	1
	O	2.20	50-026-037	Portaprezzo inferiore – RAL 9005	Lower price holder – RAL 9005	№	1
O		2.21	50-039-017	Portaprezzo ripiani – RAL 9005	Shelves price holder – RAL 9005	№	5
	O	2.21	50-039-016	Portaprezzo ripiani – RAL 9005	Shelves price holder – RAL 9005	№	5
O		2.22	50-010-054	Ripiano – RAL 9005	Shelf – RAL 9005	№	5
	O	2.22	50-010-050	Ripiano – RAL 9005	Shelf – RAL 9005	№	5
O	O	2.23	50-040-077	Copertura cavo LED – RAL 9005	LED cable covering – RAL 9005	№	5
O	O	2.24	50-001-294	Portacentralina – RAL 9005	Control panel holder – RAL 9005	№	1
O		2.25	50-018-019	Controcielino – RAL 9005	Counter ceiling – RAL 9005	№	1
	O	2.25	50-018-013	Controcielino – RAL 9005	Counter ceiling – RAL 9005	№	1
O	O	2.26	15CRMPXONE.M	Centralina comandi	Control panel	№	1
O		2.27	50-006-319	Supporto post. nido d'ape – RAL 9005	Back honeycomb support – RAL 9005	№	1
	O	2.27	50-006-197	Supporto post. nido d'ape – RAL 9005	Back honeycomb support – RAL 9005	№	1
O		2.28	50-006-318	Supporto ant. nido d'ape – RAL 9005	Front honeycomb support – RAL 9005	№	1
	O	2.28	50-006-196	Supporto ant. nido d'ape – RAL 9005	Front honeycomb support – RAL 9005	№	1

O		2.29	51-034-00009	Filtro nido d'ape	Honeycomb filter	№	1
	O	2.29	51-034-00008	Filtro nido d'ape	Honeycomb filter	№	1
O		2.30	17T960X1500HFMN	Tendina nera	Black night blind	№	1
	O	2.30	17T1160X1500HFMN	Tendina nera	Black night blind	№	1
O		2.31	50-040-082	Copertura superiore – RAL 9005	Top covering – RAL 9005	№	1
	O	2.31	50-040-021	Copertura superiore – RAL 9005	Top covering – RAL 9005	№	1
O	O	2.32	50-033-058	Piastra sup. copriforo porte – RAL 9005	Upper cover plate – RAL 9005	№	2
O	O	2.33	50-027-036	Distanziale parete DX – RAL 9005	Right wall spacer – RAL 9005	№	1
O	O		50-027-037	Distanziale parete SX – RAL 9005	Left wall spacer – RAL 9005	№	1
O	O	2.34	50-016-014	Asta a cremagliera – RAL 9005	Rack – RAL 9005	№	2
O	O	2.35	50-032-018	Piastrino fine corsa	Limit switch plate	№	2
O	O	2.36	50-007-101	Rinforzo anteriore cielino DX	Right ceiling front reinforcement	№	1
O	O		50-007-100	Rinforzo anteriore cielino SX	Left ceiling front reinforcement	№	1

TAV. 02 (ETL)

MODEL		ITEM	ARTICOLO	DESCRIZIONE	DESCRIPTION		QT.À / QT.Y
100	120						
O		2.1	17ZMCL96L66P32H	Basamento tubolare	Tubular basement	№	1
	O	2.1	–	Basamento tubolare	Tubular basement	№	1
O	O	2.2	17PA1040	Piedini sostegno basamento	Base feet	№	4
O		2.3	15UCMUR100/UL	Unità condensatrice	Condensing unit	№	1
	O	2.3	15UCMUR120/UL	Unità condensatrice	Condensing unit	№	1
O	O	2.4	22BS.MUR.SB	Basetta elettrica	Electric board	№	1
O	O	2.5	50-006-194	Sostegno basamento SX	Left basement support	№	1
O	O		50-006-195	Sostegno basamento DX	Right basement support	№	1
O		2.6	50-011-174	Schienale basamento	Basement back	№	1
	O	2.6	50-011-109	Schienale basamento	Basement back	№	1
O	O	2.7	25PL32G	Piletta di scarico	Drain tube	№	1
O		2.8	15EV.MURH22P68-78	Evaporatore	Evaporator	№	1
	O	2.8	15EV.MURH22P68-98	Evaporatore	Evaporator	№	1
O		2.9	22RC/MUR10	Resistenza sbrinamento	Defrost heat resistor	№	1
	O	2.9	22RC/MUR12	Resistenza sbrinamento	Defrost heat resistor	№	1
O	O	2.10	15ORIF03/CODS	Orifizio per valvola	Valve orifice	№	1
O	O	2.11	15TES/CODS/452	Valvola di espansione	Expansion valve	№	1
O	O	2.12	15ECM12-10-4V	Ventilatore	Fan engine	№	2
O	O	2.13	15G200P	Anello ventilatore	Fan ring	№	2
O	O	2.14	15V200-28P	Pale ventilatore	Fan blades	№	2
O		2.15	50-012-185	Vassoio – RAL 9005	Trays – RAL 9005	№	2
			50-012-186	Vassoio terminale – RAL 9005	Lateral tray – RAL 9005	№	1
	O	2.15	50-012-131	Vassoio – RAL 9005	Trays – RAL 9005	№	2
			50-012-132	Vassoio terminale – RAL 9005	Lateral tray – RAL 9005	№	1
O		2.16	50-026-089	Griglia di ripresa	Air return grid – RAL 9005	№	1
	O	2.16	50-026-036	Griglia di ripresa	Air return grid – RAL 9005	№	1
O		2.17	50-001-515	Piattina frontale	Front plate – RAL 9005	№	1
	O	2.17	50-001-338	Piattina frontale	Front plate – RAL 9005	№	1
O	O	2.18	50-033-058	Piastra copriforo porte – RAL 9005	Door hole cover plate – RAL 9005	№	2
O		2.19	14-003-00019	Deflettore	Air baffle	№	1
	O	2.19	14-003-00018	Deflettore	Air baffle	№	1
O		2.20	50-026-090	Portaprezzo inferiore – RAL 9005	Lower price holder – RAL 9005	№	1
	O	2.20	50-026-037	Portaprezzo inferiore – RAL 9005	Lower price holder – RAL 9005	№	1
O		2.21	50-039-017	Portaprezzo ripiani – RAL 9005	Shelves price holder – RAL 9005	№	5
	O	2.21	50-039-016	Portaprezzo ripiani – RAL 9005	Shelves price holder – RAL 9005	№	5
O		2.22	50-010-054	Ripiano – RAL 9005	Shelf – RAL 9005	№	5
	O	2.22	50-010-050	Ripiano – RAL 9005	Shelf – RAL 9005	№	5
O	O	2.23	50-040-077	Copertura cavo LED – RAL 9005	LED cable covering – RAL 9005	№	5
O	O	2.24	50-001-294	Portacentralina – RAL 9005	Control panel holder – RAL 9005	№	1
O		2.25	50-018-019	Controcielino – RAL 9005	Counter ceiling – RAL 9005	№	1
	O	2.25	50-018-013	Controcielino – RAL 9005	Counter ceiling – RAL 9005	№	1
O	O	2.26	15CRMPXONE.M	Centralina comandi	Control panel	№	1
O		2.27	50-006-319	Supporto post. nido d'ape – RAL 9005	Back honeycomb support – RAL 9005	№	1
	O	2.27	50-006-197	Supporto post. nido d'ape – RAL 9005	Back honeycomb support – RAL 9005	№	1
O		2.28	50-006-318	Supporto ant. nido d'ape – RAL 9005	Front honeycomb support – RAL 9005	№	1
	O	2.28	50-006-196	Supporto ant. nido d'ape – RAL 9005	Front honeycomb support – RAL 9005	№	1
O		2.29	51-034-00009	Filtro nido d'ape	Honeycomb filter	№	1
	O	2.29	51-034-00008	Filtro nido d'ape	Honeycomb filter	№	1
O		2.30	17T960X1500HFMN	Tendina nera	Black night blind	№	1
	O	2.30	17T1160X1500HFMN	Tendina nera	Black night blind	№	1
O		2.31	50-040-082	Copertura superiore – RAL 9005	Top covering – RAL 9005	№	1

	O	2.31	50-040-021	Copertura superiore – RAL 9005	Top covering – RAL 9005	№	1
O	O	2.32	50-033-058	Piastra sup. copriforo porte – RAL 9005	Upper cover plate – RAL 9005	№	2
O	O	2.33	50-027-036	Distanziale parete SX – RAL 9005	Left wall spacer – RAL 9005	№	1
O	O		50-027-037	Distanziale parete DX – RAL 9005	Right wall spacer – RAL 9005	№	1
O	O	2.34	50-016-014	Asta a cremagliera – RAL 9005	Rack – RAL 9005	№	2
O	O	2.35	50-032-018	Piastrino fine corsa	Limit switch plate	№	2
O	O	2.36	50-007-101	Rinforzo anteriore cielino SX	Ceiling front reinforcement	№	1
O	O		50-007-100	Rinforzo anteriore cielino SX	Ceiling front reinforcement	№	1

TAV. 03

MODEL		ITEM	ARTICOLO	DESCRIZIONE	DESCRIPTION		QT.À / QT.Y
100	120						
O		3.1	50-020-864	Vasca esterna	Outside tank	№	1
	O	3.1	50-020-703	Vasca esterna	Outside tank	№	1
O		3.2	50-020-865	Vasca interna	Inside tank	№	1
	O	3.2	50-020-704	Vasca interna	Inside tank	№	1
O	O	3.3	50-020-672	Fianco vasca interno SX	Left internal side	№	1
O	O		50-020-673	Fianco vasca interno DX	Right internal side	№	1
O		3.4	50-020-861	Schienale esterno inferiore	Lower outside back	№	1
	O	3.4	50-020-700	Schienale esterno inferiore	Lower outside back	№	1
O		3.5	50-020-860	Schienale esterno superiore	Upper outside back	№	1
	O	3.5	50-020-699	Schienale esterno superiore	Upper outside back	№	1
O		3.6	50-020-863	Schienale interno inferiore	Lower inside back	№	1
	O	3.6	50-020-702	Schienale interno inferiore	Lower inside back	№	1
O		3.7	50-020-862	Schienale interno superiore	Upper inside back	№	1
	O	3.7	50-020-701	Schienale interno superiore	Upper inside back	№	1
O	O	3.8	50-007-089	Rinforzi schienale	Back reinforcement	№	2
O	O	3.9	50-001-290	Carter fissaggio piletta scarico	Drainpipe fixing carter	№	1
O	O	3.10	50-001-311	Carter fissaggio piletta tubi	Tubes fixing carter	№	1
O		3.11	50-023-135	Carter coprievaporatore	Evaporator covering	№	1
	O	3.11	50-023-094	Carter coprievaporatore	Evaporator covering	№	1
O		3.12	50-024-092	Carter portaventole	Fan holder	№	1
	O	3.12	50-024-059	Carter portaventole	Fan holder	№	1
O	O	3.13	50-006-192	Squadretta DX coprievaporatore	Right evaporator covering support	№	1
O	O		50-006-193	Squadretta SX coprievaporatore	Left evaporator covering support	№	1
O	O	3.14	50-006-174	Sostegno ripresa	Inlet grid support	№	2
O	O	3.15	50-006-175	Sostegno posteriore coprievaporatore	Back evaporator covering support	№	2
O	O	3.16	50-006-173	Sostegno portaventilatori	Fan holder support	№	1
O	O	3.17	50-006-178	Sostegno cielino	Ceiling support	№	2

TAV. 04 (CE)

MODEL		ITEM	ARTICOLO	DESCRIZIONE	DESCRIPTION		QT.À / QT.Y
100	120						
	O	4.1	15CAJ4519Z	Compressore L'UH CAJ4519Z 1.5HP	Compressor	№	1
O		4.1	15CAJ4517Z	Compressore L'UH CAJ4517Z 1.2HP	Compressor	№	1
O		4.2	15C1150600C00	Condensatore	Condenser	№	1
	O	4.2	15C1140850C00	Condensatore	Condenser	№	1
	O	4.3	15NET3C18PVN004	Ventilatore 18w	Condenser fan	№	3
O		4.3	15NET3T18PVN003	Ventilatore 18w	Condenser fan	№	2
O	O	4.4	154308/M10S	Filtro a saldare	Filter	№	1
O	O	4.5	15R120-182VR02	Ricevitore di liquido	Liquid storage	№	1
O	O	4.6	15IL1/4S	Spia di liquido	Liquid spy	№	1
O	O	4.7	15REPTC400/4MT	Resistenza autolimitante	Resistor for evaporation pan	№	1

TAV. 04 (ETL, SASO)

MODEL		ITEM	ARTICOLO	DESCRIZIONE	DESCRIPTION		QT.À / QT.Y
100	120						
	O	4.1	15CAJ4517Z/60	Compressore L'UH CAJ4517Z 60Hz	Compressor	№	1
O		4.1	15CAJ4513Z/60	Compressore L'UH CAJ4513Z 60Hz	Compressor	№	1
O		4.2	15C1150600C00	Condensatore	Condenser	№	1
	O	4.2	15C1140850C00	Condensatore	Condenser	№	1
	O	4.3	15NET3C18PVN004/UL	Ventilatore 18w	Condenser fan	№	3
O		4.3	15NET3T18PVN003/UL	Ventilatore 18w	Condenser fan	№	2
O	O	4.4	154308/M10S	Filtro a saldare	Filter	№	1

O	O	4.5	15R120-182VR02	Ricevitore di liquido	Liquid storage	№	1
O	O	4.6	15IL1/4S	Spia di liquido	Liquid spy	№	1
O	O	4.7	15REPTC400/4MT	Resistenza autolimitante	Resistor for evaporation pan	№	1

TAV. 05

MODEL		ITEM	ARTICOLO	DESCRIZIONE	DESCRIPTION		QT.À / QT.Y
100	120						
O	O	5.1		Fusibile	Fuse	№	2
O	O	5.2	22FI/YE10	Filtro EMC	EMC filter	№	1
O	O	5.3	22RE25A	Relè	Relay	№	2
O	O	5.4		Morsetti	Clamp	№	9
O	O	5.5	22MW24/150	Alimentatore LRS 150-24	DC Power supply LRS 250-24	№	1
O	O	5.6		Relè pulsante	Button relay	№	1
O	O	5.7		Connettore	Connector	№	5

TAV. 06

MODEL		ITEM	ARTICOLO	DESCRIZIONE	DESCRIPTION		QT.À / QT.Y
100	120						
O	O	6.1	22PFL/GNC3K175	Mod. LED cm2835-3000k-24v-18w/metro-fr4	LED strip	№	14
O	O	6.2	22BSP.GNC1908	Profilo alluminio per led calpestabile G	Aluminium profile for led lighting	№	1
O	O	6.3	22BSP.GNC1908CD	Copertura diffusa per led calpestabile G	Diffused covering for led profile	№	1

TAV. 07

MODEL		ITEM	ARTICOLO	DESCRIZIONE	DESCRIPTION		QT.À / QT.Y
100	120						
O		7.1	XSPSTBOY1000	Porta sinistra	Left door	№	1
	O	7.1	XSPSTBOY1200	Porta sinistra	Left door	№	1
O		7.2	XSPDTBOY1000	Porta destra	Right door	№	1
	O	7.2	XSPDTBOY1200	Porta destra	Right door	№	1
O	O	7.3	50-041-001	Maniglia	Door handle	№	2
O	O	7.4	50-033-039	Piastra inferiore porta	Door lower plate	№	2
O	O	7.5	50-033-040	Piastra superiore porta	Door upper plate	№	2
O	O	7.6	50-033-041	Piastra superiore porta	Door upper plate	№	2
O		7.7	25-001-00002	Guarnizione porta	Door gasket	№	2
	O	7.7	25-001-00001	Guarnizione porta	Door gasket	№	2
O		7.8	51-033-00002	Profilo porta – RAL 9011	Door profile – RAL 9011	№	2
	O	7.8	51-033-00001	Profilo porta – RAL 9011	Door profile – RAL 9011	№	2
O		7.9	14-008-00351	Vetrocamera porta sinistra	Left door glass panel	№	1
	O	7.9	14-008-00329	Vetrocamera porta sinistra	Left door glass panel	№	1
O		7.10	14-008-00352	Vetrocamera porta destra	Right door glass panel	№	1
	O	7.10	14-008-00330	Vetrocamera porta destra	Right door glass panel	№	1

FULL TOUCH - XR70T

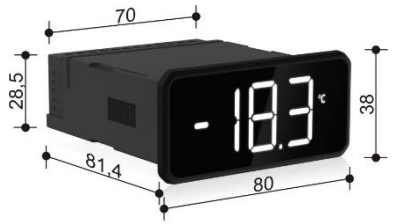

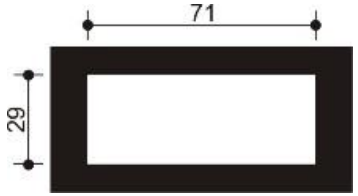

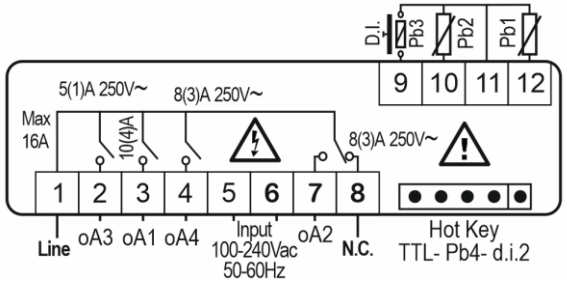



Applicare l'etichetta vicino al controllore, in modo da avere tutte le informazioni necessarie sempre a portata di mano.

CONTATTO: dixell.service@emerson.com

INFORMAZIONI DI SICUREZZA

- Il presente manuale costituisce parte integrante del prodotto e deve essere conservato presso l'apparecchio per una facile e rapida consultazione.
- Lo strumento non deve essere usato con funzioni diverse da quelle di seguito descritte, in particolare non può essere usato come dispositivo di sicurezza.
- Dixell S.r.l. si riserva la facoltà di variare la composizione dei propri prodotti, senza darne comunicazione al cliente, garantendo in ogni caso l'identica e immutata funzionalità degli stessi.
- In caso di malfunzionamento o guasto, contattare il rivenditore o "Dixell s.r.l." unitamente ad una descrizione dettagliata del problema.
- Lo strumento non deve mai essere aperto.
- Prima di procedere verificare i limiti di applicazione e la corretta tensione di alimentazione.
- Non esporre l'unità all'acqua o all'umidità: impiegare il controllore solo nei limiti di funzionamento previsti, evitando cambi repentini di temperatura in condizioni di elevata umidità atmosferica, al fine di evitare la formazione di condensa.
- Attenzione: prima di iniziare qualsiasi manutenzione scollegare l'apparecchiatura dalla rete elettrica.
- Fare attenzione alla massima corrente applicabile a ciascuna uscita relè (vedi Dati Tecnici).
- Fare in modo che i cavi delle sonde, dei carichi e dell'alimentazione rimangano separati e sufficientemente distanti fra di loro, senza incrociarsi o aggrovigliarsi.

INTERFACCIA UTENTE

SCHERMATA	DISPLAY	SCHERMATA	DISPLAY
Home		Info View	
Tastiera Virtuale		Modalità di programmazione	
Menù parametri		Menù Set Point	

NOME SCHERMATA	DESCRIZIONE
Home	Questa schermata mostra il valore di temperatura, l'unità di misura e gli allarmi attivi. E' la prima schermata che compare dopo l'accensione o appena usciti da un'altra modalità di funzionamento.
Tastiera virtuale	Questa schermata mostra le funzioni disponibili. Quando viene visualizzata questa schermata, la funzione attivata lampeggia.
Info View	Questa schermata mostra le funzioni attivate e le uscite di regolazione (compressori, ventilatori) insieme al valore della temperatura.
Menù programmazione	Questa schermata consente la modifica del Set point o dei parametri.
Menù parametri	Queste schermate consentono la modifica dei valori dei parametri.
Menù Set Point	Questa schermata consente la modifica del valore del Set Point.

INTERAZIONE UTENTE

NAVIGAZIONE DA SCHERMATA HOME	ATTIVAZIONE MENÙ PROGRAMMAZIONE	MODIFICA SET POINT	NAVIGAZIONE MENÙ PARAMETRI
			
			
SWIPE-ORIZZONTALE	SELEZIONARE E TENERE PREMUTO	SELEZIONARE SET E TENERE PREMUTO	SELEZIONARE PRG E TENERE PREMUTO
			
			
SWIPE-ORIZZONTALE			
			

GESTUALITÀ	COME FARE	DESCRIZIONE
TOCCO SINGOLO	Tenere premuta un'area specifica dello schermo per 1 sec	**Attivare / Disattivare:** in Tastiera Virtuale, utilizzare questo comando per attivare/disattivare una funzione specifica. In Programmazione, utilizzare questo comando per selezionare un parametro o il valore di un parametro.
TOCCO PROLUNGATO	Tenere premuta un'area dello schermo per 3 sec	**Entra / Salva:** usare questo comando per entrare in Programmazione o nel menù parametri e per salvare le modifiche. In Tastiera Virtuale, usare questo comando su "ONOFF" per spegnere/accendere il dispositivo.
SWIPE-ORIZZONTALE	Trascinare il dito da sinistra a destra o da destra a sinistra dello schermo	**Navigare:** usare lo swipe-orizzontale (da destra a sinistra o da sinistra a destra) per navigare nella HOME, Tastiera Virtuale e Info View. In Programmazione: usare lo swipe-orizzontale per navigare nel menù parametri.
SWIPE-VERTICALE	Trascinare il dito dall'alto verso il basso o dal basso verso l'alto dello schermo (un digit alla volta)	**Modificare:** usare lo swipe-verticale (dall'alto verso il basso o dal basso verso l'alto) per cambiare il valore di un parametro.

MENÙ DI PROGRAMMAZIONE

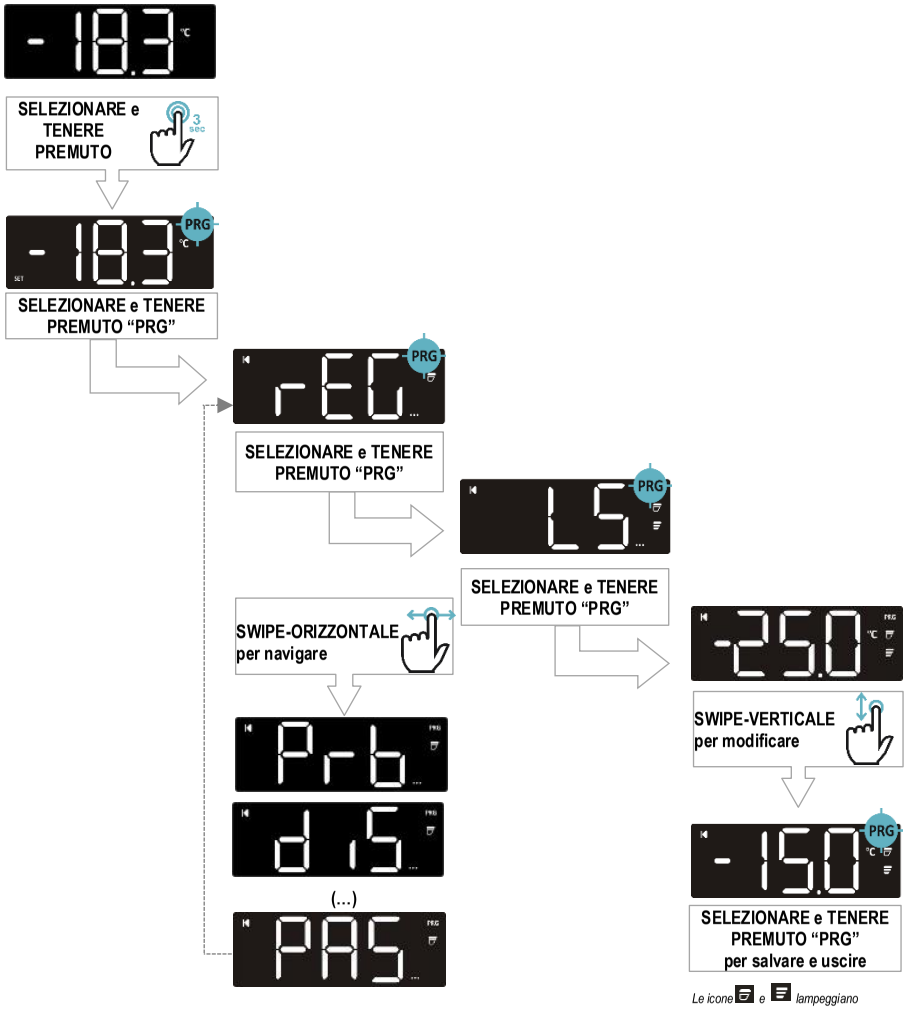

SPECIFICHE TECNICHE

CARATTERISTICHE	DESCRIZIONE
Contenitore	PC autoestinguente
Dimensioni	Frontale 38x80 mm; profondità 81mm
Montaggio	Montaggio a pannello su foro 71x29mm
Protezione	Corpo: IP20; Frontale: IP66
Alimentazione	230Vac ±10%, 50/60Hz; 110Vac ±10%, 50/60Hz; da 100 a 240VAC±10%, 50/60Hz; 12VAC ±10% Categoria di sovratensione II
Potenza nominale	12VAC: 3VA; 110VAC: 4VA; 230VAC: 4VA; 100-240VAC: 3VA
Display	Display bianco, tipo LED, 3 caratteri con punto decimale e icone multifunzione
Morsettiera	Morsetti sconnettibili o morsettiera a vite, sezione del cavo compresa tra 0.5 e 2.5 mm2 Forza massima di serraggio: 0.3 N/m per passo 3.5mm e 0.4 N/m per passo 5.0mm
Ambiente	Grado di inquinamento 2, con presenza di umidità senza condensa
Condizioni operative	IEC: 0T60°C; 20-85 rH% (con presenza di umidità senza condensa) UL: -20T60°C; 20-85 rH% (con presenza di umidità senza condensa)
Temperatura di immagazzinamento	-25T60°C; 20-85 rH% (con presenza di umidità senza condensa)
Resitenza a calore e fuoco	UL-V0
Campo di misura	NTC: -40T110°C; risoluzione 0.1°C oppure 1°C (selezionabile) PT1000: -100T150°C; risoluzione 0.1°C oppure 1°C (selezionabile) PTC: -50T150°C; risoluzione 0.1°C oppure 1°C (selezionabile)
Precisione	±1% rispetto all'intera scala
Ingressi	Fino a 4 NTC, PTC o PT1000 (configurabile) Fino a 2 contatti liberi da tensione
Uscite relé	**Nominale** / **UL** / **IEC**
	oA1: SPST 16A, 250VAC — 10FLA, 60LRA, 30k cicli, Pilot Duty B300, 6k cicli — 10(4)A, 250 Vac, 50-60 Hz, 100K cicli
	oA2: SPDT 8A, 250VAC — ½ hp, 240 Vac, 30k cicli, Pilot Duty B300, 30k cicli — 8(3)A, 230 Vac, 50-60 Hz, 50K cicli
	oA3: SPST 8A, 250VAC — ½ hp, 240 Vac, 30k cicli, Pilot Duty B300, 30k cicli — 8(3)A, 230 Vac, 50-60 Hz, 50K cicli
	oA4: SPST 5A, 250VAC — 1.9FLA, 11.4LRA, 30k cicli, Pilot Duty B300, 30k cicli — 5(1)A, 250 Vac, 50-60 Hz, 50K cicli
	Tipo di azione 1B
Orologio interno	Mantenimento dei dati fino a 6 mesi con batteria al litio
Ingresso HOT KEY	Tensione massima 5 VDC. NON COLLEGARE NESSUNA ALIMENTAZIONE ESTERNA
Omologhe	R290/R600a: relé testati secondo IEC EN60079:0 e IEC EN60079:15 IEC60730-2-9: 2008 (Terza Edizione) e Am.1:2011 insieme a IEC 60730-1:2010 (Quarta Edizione) UL 60730-1, Quinta Edizione, datata 03 Agosto 2016 UL 60730-2-9, Quarta Edizione, datata 14 Febbraio 2017 CAN/CSA-E60730-1, Quinta Edizione, datata 01 Novembre 2017 CAN/CSA-E60730-2-9:15 Terza Edizione, datata Settembre 2015

DIXELL EMERSON
Dixell S.r.l. - Z.I. Via dell'Industria, 27 - 32016 Alpago (BL) ITALY
Tel. +39.0437.9833 r.a. - Fax +39.0437.989313 - EmersonClimate.com/Dixell - dixell@emerson.com

FULL TOUCH - XR70T

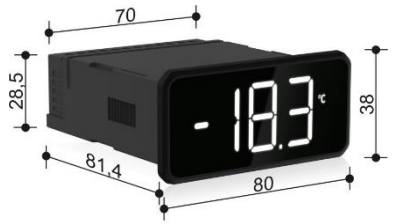

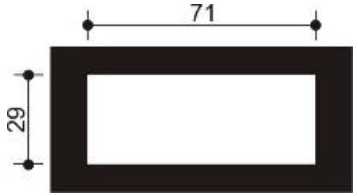

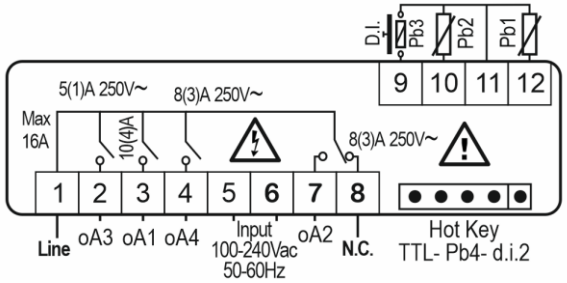



Applicare l'etichetta vicino al controllore, in modo da avere tutte le informazioni necessarie sempre a portata di mano.

CONTATTO: dixell.service@emerson.com

INFORMAZIONI DI SICUREZZA

- Il presente manuale costituisce parte integrante del prodotto e deve essere conservato presso l'apparecchio per una facile e rapida consultazione.
- Lo strumento non deve essere usato con funzioni diverse da quelle di seguito descritte, in particolare non può essere usato come dispositivo di sicurezza.
- Dixell S.r.l. si riserva la facoltà di variare la composizione dei propri prodotti, senza darne comunicazione al cliente, garantendo in ogni caso l'identica e immutata funzionalità degli stessi.
- In caso di malfunzionamento o guasto, contattare il rivenditore o "Dixell s.r.l." unitamente ad una descrizione dettagliata del problema.
- Lo strumento non deve mai essere aperto.
- Prima di procedere verificare i limiti di applicazione e la corretta tensione di alimentazione.
- Non esporre l'unità all'acqua o all'umidità: impiegare il controllore solo nei limiti di funzionamento previsti, evitando cambi repentini di temperatura in condizioni di elevata umidità atmosferica, al fine di evitare la formazione di condensa.
- Attenzione: prima di iniziare qualsiasi manutenzione scollegare l'apparecchiatura dalla rete elettrica.
- Fare attenzione alla massima corrente applicabile a ciascuna uscita relè (vedi Dati Tecnici).
- Fare in modo che i cavi delle sonde, dei carichi e dell'alimentazione rimangano separati e sufficientemente distanti fra di loro, senza incrociarsi o aggrovigliarsi.

INTERFACCIA UTENTE

SCHERMATA	DISPLAY	SCHERMATA	DISPLAY
Home		Info View	
Tastiera Virtuale		Modalità di programmazione	
Menù parametri		Menù Set Point	

NOME SCHERMATA	DESCRIZIONE
Home	Questa schermata mostra il valore di temperatura, l'unità di misura e gli allarmi attivi. E' la prima schermata che compare dopo l'accensione o appena usciti da un'altra modalità di funzionamento.
Tastiera virtuale	Questa schermata mostra le funzioni disponibili. Quando viene visualizzata questa schermata, la funzione attivata lampeggia.
Info View	Questa schermata mostra le funzioni attivate e le uscite di regolazione (compressori, ventilatori) insieme al valore della temperatura.
Menù programmazione	Questa schermata consente la modifica del Set point o dei parametri.
Menù parametri	Queste schermate consentono la modifica dei valori dei parametri.
Menù Set Point	Questa schermata consente la modifica del valore del Set Point.

INTERAZIONE UTENTE

NAVIGAZIONE DA SCHERMATA HOME	ATTIVAZIONE MENÙ PROGRAMMAZIONE	MODIFICA SET POINT	NAVIGAZIONE MENÙ PARAMETRI
			
			
SWIPE-ORIZZONTALE	SELEZIONARE E TENERE PREMUTO	SELEZIONARE SET E TENERE PREMUTO	SELEZIONARE PRG E TENERE PREMUTO
			
			
SWIPE-ORIZZONTALE			
			

GESTUALITÀ	COME FARE	DESCRIZIONE
TOCCO SINGOLO	Tenere premuta un'area specifica dello schermo per 1 sec	**Attivare / Disattivare:** in Tastiera Virtuale, utilizzare questo comando per attivare/disattivare una funzione specifica. In Programmazione, utilizzare questo comando per selezionare un parametro o il valore di un parametro.
TOCCO PROLUNGATO	Tenere premuta un'area dello schermo per 3 sec	**Entra / Salva:** usare questo comando per entrare in Programmazione o nel menù parametri e per salvare le modifiche. In Tastiera Virtuale, usare questo comando su "ONOFF" per spegnere/accendere il dispositivo.
SWIPE-ORIZZONTALE	Trascinare il dito da sinistra a destra o da destra a sinistra dello schermo	**Navigare:** usare lo swipe-orizzontale (da destra a sinistra o da sinistra a destra) per navigare nella HOME, Tastiera Virtuale e Info View. In Programmazione: usare lo swipe-orizzontale per navigare nel menù parametri.
SWIPE-VERTICALE	Trascinare il dito dall'alto verso il basso o dal basso verso l'alto dello schermo (un digit alla volta)	**Modificare:** usare lo swipe-verticale (dall'alto verso il basso o dal basso verso l'alto) per cambiare il valore di un parametro.

MENÙ DI PROGRAMMAZIONE

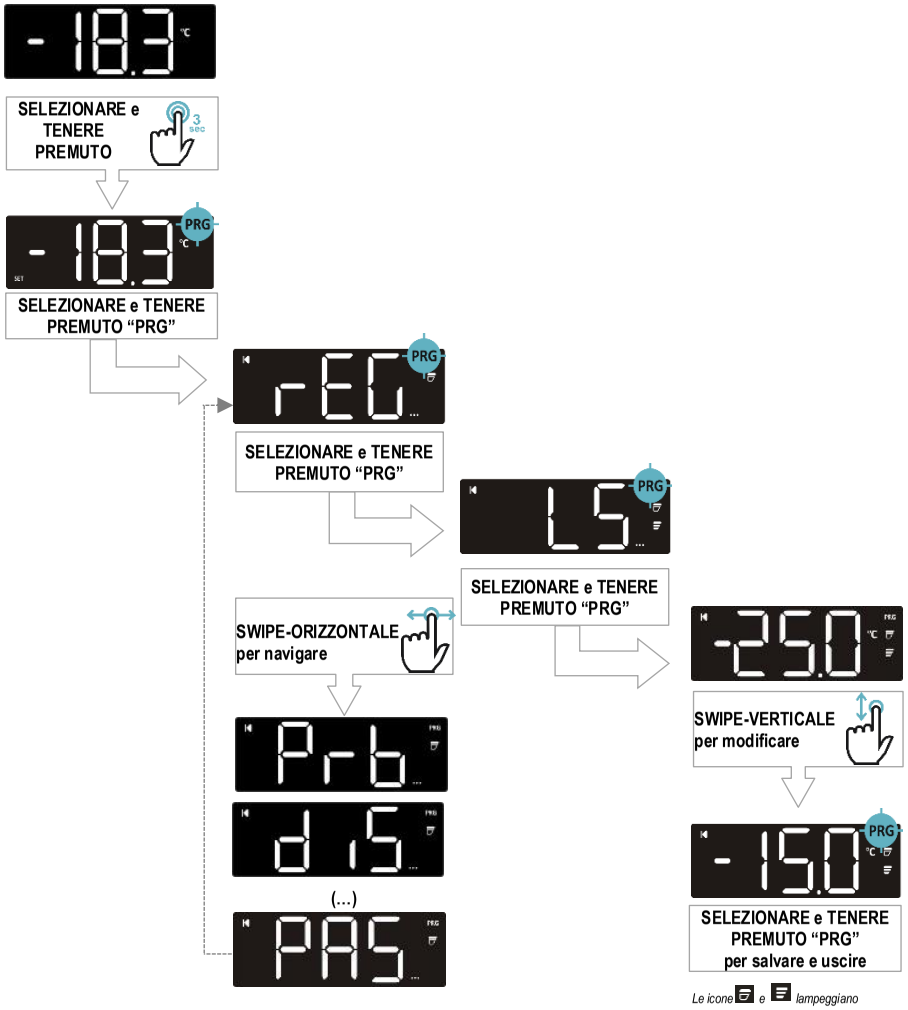

SPECIFICHE TECNICHE

CARATTERISTICHE	DESCRIZIONE
Contenitore	PC autoestinguente
Dimensioni	Frontale 38x80 mm; profondità 81mm
Montaggio	Montaggio a pannello su foro 71x29mm
Protezione	Corpo: IP20; Frontale: IP66
Alimentazione	230Vac ±10%, 50/60Hz; 110Vac ±10%, 50/60Hz; da 100 a 240VAC±10%, 50/60Hz; 12VAC ±10% Categoria di sovratensione II
Potenza nominale	12VAC: 3VA; 110VAC: 4VA; 230VAC: 4VA; 100-240VAC: 3VA
Display	Display bianco, tipo LED, 3 caratteri con punto decimale e icone multifunzione
Morsettiera	Morsetti sconnettibili o morsettiera a vite, sezione del cavo compresa tra 0.5 e 2.5 mm2 Forza massima di serraggio: 0.3 N/m per passo 3.5mm e 0.4 N/m per passo 5.0mm
Ambiente	Grado di inquinamento 2, con presenza di umidità senza condensa
Condizioni operative	IEC: 0T60°C; 20-85 rH% (con presenza di umidità senza condensa) UL: -20T60°C; 20-85 rH% (con presenza di umidità senza condensa)
Temperatura di immagazzinamento	-25T60°C; 20-85 rH% (con presenza di umidità senza condensa)
Resitenza a calore e fuoco	UL-V0
Campo di misura	NTC: -40T110°C; risoluzione 0.1°C oppure 1°C (selezionabile) PT1000: -100T150°C; risoluzione 0.1°C oppure 1°C (selezionabile) PTC: -50T150°C; risoluzione 0.1°C oppure 1°C (selezionabile)
Precisione	±1% rispetto all'intera scala
Ingressi	Fino a 4 NTC, PTC o PT1000 (configurabile) Fino a 2 contatti liberi da tensione
Uscite relé	**Nominale** / **UL** / **IEC**
	oA1: SPST 16A, 250VAC — 10FLA, 60LRA, 30k cicli, Pilot Duty B300, 6k cicli — 10(4)A, 250 Vac, 50-60 Hz, 100K cicli
	oA2: SPDT 8A, 250VAC — ½ hp, 240 Vac, 30k cicli, Pilot Duty B300, 30k cicli — 8(3)A, 230 Vac, 50-60 Hz, 50K cicli
	oA3: SPST 8A, 250VAC — ½ hp, 240 Vac, 30k cicli, Pilot Duty B300, 30k cicli — 8(3)A, 230 Vac, 50-60 Hz, 50K cicli
	oA4: SPST 5A, 250VAC — 1.9FLA, 11.4LRA, 30k cicli, Pilot Duty B300, 30k cicli — 5(1)A, 250 Vac, 50-60 Hz, 50K cicli
	Tipo di azione 1B
Orologio interno	Mantenimento dei dati fino a 6 mesi con batteria al litio
Ingresso HOT KEY	Tensione massima 5 VDC. NON COLLEGARE NESSUNA ALIMENTAZIONE ESTERNA
Omologhe	R290/R600a: relé testati secondo IEC EN60079:0 e IEC EN60079:15 IEC60730-2-9: 2008 (Terza Edizione) e Am.1:2011 insieme a IEC 60730-1:2010 (Quarta Edizione) UL 60730-1, Quinta Edizione, datata 03 Agosto 2016 UL 60730-2-9, Quarta Edizione, datata 14 Febbraio 2017 CAN/CSA-E60730-1, Quinta Edizione, datata 01 Novembre 2017 CAN/CSA-E60730-2-9:15 Terza Edizione, datata Settembre 2015

DIXELL EMERSON
Dixell S.r.l. - Z.I. Via dell'Industria, 27 - 32016 Alpago (BL) ITALY
Tel. +39.0437.9833 r.a. - Fax +39.0437.989313 - EmersonClimate.com/Dixell - dixell@emerson.com