FULL TOUCH – XD70T

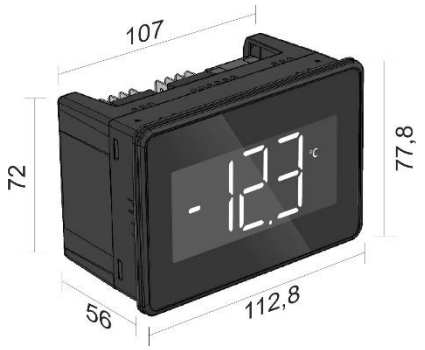

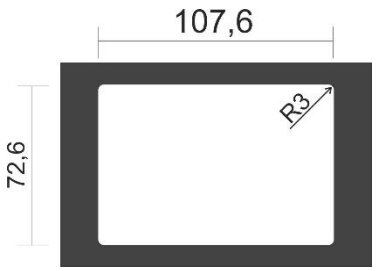

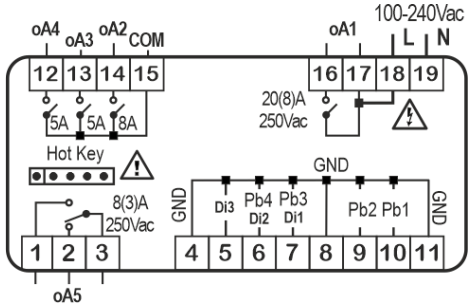

Internal short circuit between terminal number 17 and 18.

Manuals on Dixell website:

CONTACT: dixell.service@emerson.com

SAFETY INFO

- This manual is part of the product and should be kept near the instrument for easy and quick reference.
- The instrument shall not be used for purposes different from those described hereunder. It cannot be used as a safety device.
- Dixell Srl reserves the right to change the composition of its products, even without notice, ensuring the same and unchanged functionality.
- In case of failure or faulty operation contact the local distributor or "Dixell S.r.l." with a detailed description of the fault.
- The instrument must not be opened.
- Check the application limits and the correct power supply voltage before proceeding.
- Do not expose to water or moisture: use the controller only within the operating limits avoiding sudden temperature changes with high atmospheric humidity to avoid condensation
- Warning: disconnect the power supply and all other electrical connections before any kind of maintenance.
- Observe the maximum current value which can be applied to each relay (see Technical Data).
- Ensure that the wires for probes, loads and the power supply are separated and far enough from each other, without crossing or intertwining.

USER INTERFACE

SCREEN	APPEARANCE	SCREEN	APPEARANCE
Home		Info	
Virtual Keyboard		Programming Mode	
Parameter Menu		X9	

SCREEN NAME	DESCRIPTION
Home	This screen shows temperature value, measurement unit and active alarms only. This is the first screen after power on or after exit from other status.
Virtual Keyboard	This screen shows available functions. Activated function will blink when this screen is visualized.
Info	This screen shows activated functions and regulation outputs (compressor, ventilators)
Programming Mode	This screen enables the modification of Set point or parameters.
Parameter Menu	These screens enable the modification of all parameter values.
X9	This screen is for creating the parameter label by swiping-up every single part of the label itself (first, second and third char)

USER INTERACTION

HOME NAVIGATION	PROG MENU	SET POINT TEMPERATURE
		
 H-SWIPE	 TAP & HOLD ANYWHERE	 TAP & HOLD ANYWHERE
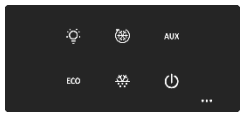		
 H-SWIPE	TAP & HOLD PRG 	 TAP & HOLD SET
		
 H-SWIPE	 H-SWIPE	 V-SWIPE
		

GESTURE	HOW-TO	DESCRIPTION
ONE TAP	Press a specific area of the surface with a finger for 1 sec	**Switch ON / Switch OFF:** when in Virtual Keyboard, use this to turn on/off a specific function. When into programming mode, use this to select a parameter or a parameter value.
TAP and HOLD	Press anyplace of the surface with a finger for 3 sec	**Enter / Save:** use this to enter programming mode or parameter menu and to save modifications. When in Virtual Keyboard, use this on the "ONOFF" to switch OFF and ON the device.
H-SWIPE	Drag a finger across surface, from left to right or from right to left	**Browse:** use horizontal swipe (right to left or left to right) to browse through HOME, Virtual Keyboard and Info View. When in Programming menu: use horizontal swipe to browse through parameter menu.
V-SWIPE	Drag a finger across surface, from top to bottom or from bottom to top (overlapping only one of the digits)	**Modify:** use vertical swipe (from top to bottom or bottom to top) to change a parameter value.

TECHNICAL SPECIFICATIONS

FEATURES	DESCRIPTION			
Housing	Self-extinguishing PC			
Dimensions	Front fascia 77.8x112.8 mm; case depth 56mm			
Mounting device	Panel, 72.6x107.6mm panel cut-out			
Degree of Protection	**NEMA – UL 50e**	Indoor use only, Type 1 enclosure		
	IP-IEC/EN 60529	Front panel: IP54	Rear Housing: IP00	
Power Supply	100 to 240VAC±10%, 50/60Hz			
Overvoltage Category	II			
Rated Power	100-240VAC: 5VA max			
Rated Impulse Voltage	2500V			
Display	White display, LED type, 3 digits with decimal point and multi-function icons			
Buzzer	Internal, always present			
Software Class	A			
Terminal blocks / Terminal Connections	Plug-in or screw terminal block: wire section between 0,5 and 2,5 mm^2; max tightening force: 0.3 N/m for 3,5mm pitch, 0.4 N/m for 5,0mm pitch. Quick tab connectors: 5mm			
Data Storing	**Real Time Clock:** Data maintenance up to 6 months with lithium battery. **Other parameters:** internal EEPROM.			
Type of Action	1.B			
Pollution Degree	2, non-condensing humidity			
Ambient Operating Temperature and Humidity	**IEC/EN**	0T55°C; 20-85 rH% (non-condensing humidity)		
	UL-CAN/CSA	-20T55°C; 20-85 rH% (non-condensing humidity)		
Shipping and storage temperature	-40T85°C; 20-85 rH% (non-condensing humidity)			
Resistance to Heat	UL 94 V-0			
Measurement range	**NTC:** -40T110°C, resolution 0.1°C or 1°C (selectable); **PT1000:** -100T150°C, resolution 0.1°C or 1°C (selectable); **PTC:** -50T150°C, resolution 0.1°C or 1°C (selectable)			
Accuracy	±1% compared to the full scale			
Inputs	Up to 4 NTC, PTC or PT1000 (configurable); Up to 2 voltage free contacts			
Relay Outputs		**Nominal**	**UL**	**IEC**
	oA1	SPST 20A, 250Vac	Resistive load 11A (NO only), 240Vac, 100k cycles Motor load 1HP (16FLA/96LRA, NO only), 120Vac, 30k cycles Motor load 2HP (12FLA/72LRA, NO only), 240Vac, 30k cycles	11(8)A (NO only), 240 Vac, 100k cycles
	oA2 **oA5**	SPDT 8A, 250Vac	Resistive load 8A (NO only), 240Vac, 30k cycles Motor load 1/2HP (NO only), 240Vac, 30K cycles Pilot Duty B300 (NO only), 6K cycles	8(3)A (NO only), 240Vac, 100k cycles
	oA3 **oA4**	SPST 5A, 250Vac	Resistive load 5A (NO only), 240Vac, 50k cycles Motor load 1,9FLA/11,4LRA (NO only), 240Vac, 30K cycles Pilot Duty B300 (NO only), 30K cycles	5A (NO only), 240Vac, 50k cycles

Maximum ampacity on common terminal "Line" n. 15 (for oAx)	12A
I/O port	HOT-KEY: MAX voltage allowed is 5 VDC. DO NOT CONNECT ANY EXTERNAL POWER SUPPLY.
Purpose of control	Operating control
Construction of control	Incorporated control, intended to be used in Class I or Class II equipment
Approvals	R290/R600a: relays tested according to IEC EN60079:0 and IEC EN60079:15 IEC/EN 60730-1; IEC/EN 60730-2-9 UL 60730-1; UL 60730-2-9 CAN/CSA E60730-1; CAN/CSA E60730-2-9 IEC 60335-2-24:2010, AMD1:2012, AMD2:2017 in conjunction with IEC 60335-1:2010, COR1:2010, COR2:2010, AMD1:2013, COR1:2014, AMD2:2016, COR1:2016 IEC 60335-2-89:2019 for use in conjunction with IEC 60335-1:2010, AMD1:2013, AMD2:2016

DIXELL EMERSON
Dixell S.r.l. - Z.I. Via dell'Industria, 27 - 32016 Alpago (BL) ITALY
Tel. +39.0437.9833 r.a. - Fax +39.0437.989313 - EmersonClimate.com/Dixell - dixell@emerson.com